CITY OF TUSCALOOSA
INFRASTRUCTURE AND PUBLIC SERVICES

City of
TUSCALOOSA

WATER DISTRIBUTION SYSTEM ENGINEERING STANDARDS

NOVEMBER 2017

TABLE OF CONTENTS

TERMS USED IN THIS DESIGN GUIDE

Terms Used	Definition
ADEM	The Alabama Department of Environmental Management
Approved Contractor	General Contractor approved by the City to perform water extensions
AWWA	American Water Works Association
Betterment	An improvement that adds value to the distribution system of the City while not being necessary to meet the service requirements of the particular Industrial/Commercial Site or Subdivision
City	The City of Tuscaloosa, Alabama; A Municipal Corporation
CFR	Code of Federal Regulations
Design Engineer	The Licensed Professional Engineer and/or the firm he/she performs engineering design services as a part of
Developer	The company, individual, or individuals improving, changing or building upon a particular property or site
Expansion	The water mains and appurtenances required to extend or improve the distribution system of the City in order to provide a safe and reliable level of water service to a site
Guide	The Water Distribution System Engineering Standards of the City of Tuscaloosa, AL; this document
IPS	The Department of Infrastructure and Public Services
ISO	Insurance Services Office
Land Surveyor	The Licensed Land Surveyor and/or the firm he/she performs land surveying services as a part of
Project	The improving, changing or building upon a particular property or site

PART 1 – GENERAL REQUIREMENTS

1.01 General

All design and construction of expansion to the water distribution system of the City of Tuscaloosa shall be in accordance with the City Code as amended or any further amendments. This document is provided as a guide to the design and construction of extensions to the water distribution system of the City and is not intended to supersede any Ordinances, Laws or Regulations.

1.02 Registration and Licensing

A Professional Engineer licensed in the State of Alabama shall perform all designs of expansions to the water distribution system of the City. Construction of expansions to the water distribution system of the City shall be performed by contractors approved by the City and in strict accordance with the Ordinances of the City.

1.03 Procedure

The following procedure shall be followed for the application and performance of an expansion to the City of Tuscaloosa Water Distribution System. The procedure may be amended and additional items required at the discretion of IPS.

1. The engineer for the developer or individual desiring to expand the water distribution system of the City shall obtain a copy of *Water Distribution System Permit* application.

2. If the expansion is for service in a subdivision, the developer must have received preliminary approval from the City of Tuscaloosa Planning Commission in the form of an approved preliminary plat, and City Council for a PUD, before any work pertaining to the water distribution system expansion can proceed.

3. Particular attention shall be noted to the information requirements of the *Water Distribution System Permit* application. Incomplete information will delay review and approval of the *Water Distribution System Permit* application.

4. The engineer for the developer shall provide the water utility plan, the completed *Water Distribution System Permit* application, and supporting documentation to IPS when completing and submitting an application for a Land Development Permit. IPS will review to verify conformance with approved plan and standard specifications per the *City of Tuscaloosa - Water Distribution System Engineering Standards*.

5. If required, Following review and comment by IPS the engineer shall resubmit revised plans.

6. Once water utility design has been approved, the developers engineer shall submit an estimate of cost of work to be performed. This item shall be the *Water Distribution System Permit Estimate.* The *Water Distribution System Permit Estimate* shall consist of the estimated cost in full for materials, labor, and incidentals expenses to complete the expansion to the City water distribution system. The *Water Distribution System Permit Estimate* should not include items on the private side of the water distribution system. See Section 1.04 Limits of City Owned Facilities.

7. IPS will review and comment on the *Water Distribution System Permit Estimate*. Once there are no further comments IPS will approve. The developer shall submit a Performance Bond in the amount of 1.1 times the *Water Distribution System Permit Estimate*. Design CAD files should also be submitted to IPS at this time.

8. Once the previous steps are completed to the satisfaction of IPS, the *Water Distribution System Permit* will be issued.

9. Developer or Developer's representative shall submit materials list to IPS for review and approval prior to ordering of material. IPS will review to verify conformance with approved plan and standard specifications per the *City of Tuscaloosa - Water Distribution System Engineering Standards*.

10. Mandatory Pre-Construction meeting shall be held prior to beginning construction. IPS will schedule the project Pre-construction Conference. The Design Engineer of the project shall attend. IPS will schedule the project Pre-construction Conference following approval of the submitted & approved materials list.

11. Materials arriving on-site shall be inspected and approved by City of Tuscaloosa prior to installation of water distribution system. The developer's contractor shall be responsible for supplying the delivery ticket that the contractor receives for the materials delivered onsite for use in city's water distribution system.

12. The design engineer will provide all staking for the location of mains and appurtenances to be constructed.

13. The design engineer will provide Resident Project Observation and shall prepare record drawings, including valve location details. The city will, at its own discretion perform additional resident observation.

14. The project shall be accessible to the City for inspection by the City at all times.

15. The developer's contractor shall install the water distribution system per

approved plan.

16. Easements, if necessary, shall be submitted to IPS for review and approval. No water distributions system improvements will be accepted for service until all easements have been prepared and granted to the City. (See Part 6 – Sites and Easements Surveys and Descriptions)

17. No expansions to the water distribution sysrem will be accepted for service until the following have been provided to IPS and accepted:

    - Record Drawings showing the installed size, type and location of water mains, and other appurtenances as constructed. (In CAD format)
    - Valve details for every valve showing a minimum of two ties to permanent structures.
    - GPS coordinates of each valve and fire hydrant installed.

18. Once water distribution system improvements have been accepted, Performance Bond will be released and *Water Distribution System Permit* will be closed.

1.04 Limits of City Owned Facilities

The following shall be the limits of City owned and maintained water facilities:

1. The Backflow Preventer of a Domestic Service, Irrigation Service, or Master Meter.

2. The Backflow Preventer of a fire main.

PART 2 – GENERAL DESIGN REQUIRMENTS

2.01 General

The design of the expansion to the water system shall be in accordance with the following requirements. In addition, the expansion shall be designed utilizing current industry standards and in accordance with ADEM and AWWA standards.

2.02 City Betterment

The City reserves the right to require a larger size main and/or additional length and appurtenances when it is decided it is in the best interest of the City to do so. Additional costs associated with a betterment will be borne by the City. Determination shall be based on the following factors:

1. Plans for future development in the area.

2. Existing needs for increased water service in the area.

3. Provision for increased water supply to a particular area.

2.03 Materials

Materials shall meet City of Tuscaloosa specifications as outlined in Part 7- Standard Material Specifications and other pertinent sections of these guidelines.

2.04 Water Mains

All water mains two (2) inches in diameter shall be 2" PVC Class 200 pipe. All water mains four (4) inches in diameter and larger shall be installed with Ductile Iron Pipe. Water mains four (4) inches in diameter through twelve (12) inches in diameter shall be Class 52 pipe. All water mains fourteen (14) inches in diameter and larger shall be class 50 pipe.

2.05 Valves

Valves shall be placed in order to isolate sections of mains as required. As a general rule, all intersections will be valved each way, a valve shall be placed at the point of connection, at the end of each main, and at the beginning of a fire main.

2.06 Valve Boxes

Valve boxes shall be set flush with finish grades when under pavement and when in back of rights-of-way. Valve boxes shall be properly extended if needed.

2.07 Polyethylene Encasement

Water mains crossing gas mains and other steel lines shall be polyethylene encased a minimum of fifty (50) feet to either side of the crossing.

2.08 Encasement of Mains for Road and Railroad Crossings

1. Where applicable, water mains shall be encased in accordance with the requirements of the Alabama Department of Transportation, Tuscaloosa County Public Works, and Railroads. As a minimum casing sizes, shall be:

Carrier Size (Ductile Iron)	Min. Casing Diameter (Steel)	Min. Casing Thickness
6”	12”	.250”
8”	16”	.250”
12”	24”	.375”
16”	30”	.500”
24”	42”	.5625”

2. Casings shall be installed by dry bore and jacking or tunneling. Open cut installation shall only be performed with the written permission of the applicable agency.

3. Casings shall include casing end seals and spacers. The carrier pipe shall be installed with gripper type gaskets or restrained joint DI pipe. A minimum of two spacers per joints shall be installed 5’ on either side of the joint.

2.09 Permits

The Design Engineer shall prepare applications for permits as applicable to the project. Permit applications shall be submitted to the City through IPS. All fees associated with permit applications shall be paid by the developer. Permits shall include, if applicable but are not limited to, ADEM Water Supply Permit (if it is determined by IPS that a permit is required), ALDOT Utility Permit, Tuscaloosa County Public Works Utility Permit, Railroad Crossing Permit, and Utility (Transmission Main) Crossing Permits.

2.10 Minimum/Maximum Cover

Water Mains shall be installed with a minimum of thirty (30) inches of cover. Mains to be installed at a depth greater than seventy-two (72) inches of cover shall be noted on the plans submitted to IPS. Cover on pipe shall conform to the requirements of permitting agencies, ALDOT, TCOPW, etc.

2.11 Trenching

Trenches for water mains shall be excavated for the proper installation and maintenance of the water main. Trenching shall conform to the following:

1. Trenching shall be performed in strict accordance with 29 CFR 1926.650-.652 Subpart P. At no time will the City or its agents be designated or otherwise indicated to be the “On Job Responsible Official.”

2. Cutting of paved roads, drives and parking lots will be minimized and performed under permit by the appropriate agency. When open-cutting is permitted, one lane of traffic must be maintained at all times. No open cuts will be allowed to remain open past the end of the work day.

3. Proper trench foundation material, bedding, and select backfill shall be specified. (See Part 9 – Standard Details)

4. Rock excavation shall be specified and performed in accordance with pipe manufacturer and industry recommendations. If rock excavation is to be performed and requires blasting, a blasting plan shall be prepared and approved by IPS and design engineer. Pre-blast surveys and blast monitoring shall be performed.

5. Water mains shall have a minimum vertical clearance of twelve (12) inches over or under other utilities when crossing.

6. Water mains shall have a minimum horizontal separation of five (5) feet when parallel to a sanitary sewer main. Where possible, when crossing the sanitary sewer, the bottom elevation of the water main shall be no less than eighteen (18) inches higher than the top elevation of the sewer main.

7. Where separation is not possible in accordance with paragraph 5 & 6, the water main shall be installed in a casing, meeting the requirements of paragraph 2.08, of a length that will provide five feet of horizontal separation.

8. All water distribution PVC pipe shall include a tracer wire when installed.

2.12 Thrust Blocking

The design shall require fittings to be thrust blocked in accordance with industry standards. Fittings shall be wrapped to prevent concrete from fouling bolt threads and flanges. (See Part 9 – Standard Details)

2.13 Restrainer Glands on Fittings and Valves

All fittings, valves, and hydrants shall be installed with restrainer glands.

2.14 Tapping Sleeves

Tapping sleeves shall be blocked to prevent stresses on mains during tapping. Tapping sleeves shall be static tested with water or air prior to tapping of water mains. The coupon shall be delivered to IPS.

2.15 Meter Locations

Meter boxes shall be set on public right-of-way (with the exception of ALDOT rights-of-way) and in a location that will prevent damage by vehicles. Meter boxes shall be set in locations that will not tend to pond or hold water. Fittings shall be installed as required to set meters at the proper depth for standard vaults or boxes.

2.16 Pressure Testing

The water system expansion shall be installed free of leakage. All water mains, services and appurtenances shall be pressure tested in accordance with the requirements of ADEM. As a minimum, testing shall consist of:

1. Mains shall be tested at 1.5 times the working pressure of the main and at no less than 150 psi, but no greater than the rated pressure of the pipe, fittings and appurtenances.

2. Trapped air shall be exhausted prior to testing.

3. Test pressure shall be maintained during the duration of the test at +/- 5 psi from the test pressure.

4. The test duration shall be no less than two (2) hours for exposed pipe and no less than six (6) hours for buried pipe.

5. Recordings of all pressure tests shall be provided to the City. Recordings shall include all data of test including date, pipe size and length, and resident observer acceptance.

6. All visible leakage shall be repaired.

7. Leakage shall not be greater than:

$$L = \frac{SDP^{1/2}}{148{,}000}$$

where L = Allowable leakage per hour, S = Length of pipe (feet), D = Diameter of pipe (inches), P = Average Test Pressure (psi)

8. A meter shall be used during the duration of the test to determine if the volume of water required to maintain test pressure exceeds the total allowable leakage.

2.17 Pigging of Water Mains

Mains sixteen (16) inches and larger in diameter shall be pigged prior to flushing, testing and disinfecting. Fittings for pigging shall be provided and remain for future pigging by the City.

2.18 Disinfection of Water Mains

No water main shall be placed into service until it has been disinfected in accordance with AWWA Standard C651. All water mains shall be flushed at a minimum velocity of two and one half (2 1/2) fps prior to sampling. A representative of IPS will perform bacteriological testing once notified that mains are flushed and ready for sampling.

2.19 Provision for Future Water System Expansion
The City may require the developer to include, as part of its extension, the provisions for the City to extend the water mains in the future. The developer shall in all projects provide any easement required for future expansion to City right-of-way should the water system expansion end in an easement.

2.20 Relocation of Water Mains
If existing water mains must be relocated, lowered, or otherwise adjusted as part of the water system expansion, this work shall be considered part of the work and the associated cost included in the water system expansion.

2.21 Irrigation Meters
Meters installed for irrigation purposes shall be shown on the site plan and designated therein for irrigation purposes.

2.22 Flush Services
A flush service shall be provided for all mains ending at a "dead-end" unless a fire hydrant is installed at the location.

2.23 Loop
The system shall be looped utilizing the larger size of parallel mains at each intersection within a subdivision extension where possible.

2.24 Flush Assemblies
Flush assemblies shall be installed on larger (16" and greater) diameter mains at low points along the main to facilitate flushing sediment. Flush assemblies shall be sized to provide a minimum flushing velocity of two and one half (2 ½) fps.

2.25 Typical Utility Layout
Water mains shall generally be installed thirty (30) inches behind the curb in accordance with the Typical Configuration of Utilities, Figure V, of the City of Tuscaloosa Subdivision Regulations.

2.26 Service Lines
Service lines from mains to meter locations shall not be installed under pavement. The use of parallel mains along residential streets will be used and designed in accordance with Section 3.03.2. Line replacement projects where the location of the new water main is within residential streets will be exempt from this provision.

PART 3 – SIZING DISTRIBUTION MAINS AND SERVICES

3.01 General

Distribution mains and services shall be sized to provide for adequate residual pressure as required by the served structure or area.

3.02 Data Collection

The Design Engineer shall perform fire hydrant flow tests and pressure recordings to determine the operating condition of the existing system. Data for the hydraulic calculations shall be obtained as a minimum by the following:

1. The Design Engineer shall coordinate with IPS and then perform system flow tests and pressure recordings in accordance with Fire Flow Test practices as published by the American Insurance Association.
2. Pressure recordings of the system in the vicinity of the project shall be made for a minimum duration of forty-eight (48) hours. Recordings shall collect minimum, maximum and average pressures sampled at a rate no less than five (5) times per minute and recorded no less than once per five (5) minutes. All data will be submitted to IPS with the request for a water permit application.
3. The Design Engineer shall obtain the water tank level of the appropriate pressure zone of the City system at the time of the pressure recordings and flow tests.

3.03 Sizing Mains

The Design Engineer shall determine the required flow and residual pressure required. Mains shall be sized in accordance with the following:

1. The water system expansion shall be designed to produce a minimal residual pressure of thirty (30) psi at the meter.
2. The water system expansion shall be designed for a flow rate, which includes fire flow as per Part 4.01.3. and a domestic flow demand of forty (40) gpm x (number of customer)^{½} to be served. (Forty gpm is based on 15 gpm domestic demand and 25 gpm irrigation demand). The Hazen-Williams equation shall be used in the design and analysis of pressure pipe systems for water distribution. A roughness coefficient for ductile iron pipe of 130 and 150 for PVC shall be used.
3. Water main sizing for apartment complexes, condominiums, commercial and institutional building complexes, shall be sized using the domestic demand for residential usage as fifteen (15) gpm x (number of customers)$^{1/2}$ plus an irrigation demand of 25 GPM per circuit plus any other anticipated water demands.

   Demand information utilized shall be submitted to IPS along with other required submittals.

4. Higher flow rates shall be considered for customers with anticipated higher flow demands.
5. Multi-story dwellings shall be given appropriate consideration, if applicable.
6. Domestic mains consisting of 6” Ductile Iron Class 52, 4” Ductile Iron Class 52 and 2” PVC Class 200 shall be used as parallel mains along residential streets to avoid the need for service lines under pavement. Provided however, all planned structures will be within the required distance of a fire hydrant meeting the required fire flow. All 2” water mains used as parallel mains shall be interconnected to larger mains thereby creating a loop through the 2” water main.
7. A water main that extends an existing water main will be sized no smaller than the main it connects to if the water system expansion will affect the City’s ability to extend the main in the future.

3.04 Sizing Service Lines

Service lines shall be sized to provide the required residual pressure and in accordance with the following:

1. No service line shall be smaller than 3/4” in diameter.

2. No service line shall be sized smaller than the nominal size of the meter.

3.05 Submittals

Data to be submitted with the application for a water main extension:

1. Flow Test
   Test data shall include actual flow rate obtained, static and residual pressure on test hydrant and recording hydrant.

2. Pressure Recording
   Test data shall be reported in five (5) minute increments and shall print minimum, maximum, and average pressure.

3. Hydraulic Analysis
   The hydraulic analysis shall show that the design is in compliance with the design parameters as per section 3.03. The design specifically shall show residual pressures at all minimum and maximum elevations based on the final design of the development. Included with the calculations shall be a nodal map indicating all major junctions, demand inputs, and piping segments with sizes.

4. Construction Plans
   Plans shall be submitted on a minimum 22”x34” sheet size and with a scale not less than 1”= 60’ in PDF format. Plans shall include as a minimum the following items:

   1. Project name, name of preparing firm, date of project and seal of Design Engineer.

   2. Vicinity Map of project, legend and graphic scale.

   3. Layout of proposed mains and associated easements.

   4. Details of planned connections, services, other appurtenances, and other utilities, i.e. (storm, sanitary).

   5. Standard details of appurtenances.

   6. If necessary, provide bore profiles.

PART 4 – FIRE DESIGN REQUIREMENTS

4.01 General

Fire Flow shall be calculated considering rate of flow with a minimum residual pressure of thirty (30) psi. Fire Flow Calculations shall be submitted to IPS when requesting a Developer Constructed water system expansion and shall include fire flow test results. Fire flow design shall be performed in accordance with the following:

1. The ISO Guide for Determination of Needed Fire Flow shall be used unless an exception is requested and noted in the approval process.

2. Testing of the existing system shall be coordinated through IPS. The Engineer will use their own gauges and City personal will operate hydrants.

3. The following minimum fire flows shall be provided. If the Engineer determines these flows cannot be obtained, he/she shall notify IPS and request direction from IPS.

Distance Between Residential Buildings	**Needed Fire Flow**
11-30’	1,000 gpm
10’ or less	1,500 gpm
ISO – Guide for Determination of Needed Fire Flow, Chapter 7	

4. Fire sprinkler system demand requirements must be submitted along with fire flow calculations and shall be submitted to the Fire Marshal for approval. At no time should it be assumed that the City warranties the fire flow, therefore, equipment for supplemental pumping should not be excluded solely upon the assumption that a particular flow will be available.

5. Backflow prevention must be incorporated into the design of the fire flow main in accordance with AWWA Manual M14 utilizing a Double Check Valve Assembly. (See Standard Drawings) The minimum backflow protection device shall be 2” and shall be supplied by 2” brass, 2” “Type K” Copper, or 4” ductile iron water main. Specification on all City installed backflow prevention devices can be obtained from IPS.

6. All fire mains shall be constructed with ductile iron pipe up to the City owned and operated backflow prevention device.

7. Site plans shall be designed to prevent obstruction of fire hydrants, fire mains and their related appurtenances. The design shall also prevent the blocking of other fire apparatus by fire vehicles when in use.

8. Detector checks and meters used for fire sprinkler systems (such as residences) shall be clearly differentiated to prevent future lock-out.

4.02 Fire Hydrants

1. Fire hydrants shall be included in the design of commercial, industrial and residential extensions regardless of sprinkler system design and installation.

2. In Mobile Home Parks and other places where a master meter is installed, no fire hydrant shall be installed on the metered main. Fire protection shall be provided by a separate fire protection system.

3. Fire hydrants shall be generally placed at each intersection and no further than the following distance from buildings or dwellings (measured along normal routes of fire department vehicle access):

   A shorter distance may be required if, in the judgment of the Fire Marshal, additional hydrants are required to adequately protect the development.

Single Family Residential Area	1000 foot maximum spacing and within 500 feet of every planned structure
Industrial/Commercial Area	Within 500 feet of every structure

4. Fire hydrants shall be placed behind the back of curb near the rights-of-way, or shall be in a dedicated easement.

5. Fire hydrants shall be generally placed such that the hydrants will be located to the right of a fire truck as it enters the development.

6. Valves shall be installed on the water main connecting the fire hydrant to the distribution main.

7. Fire hydrants shall be set plumb and at a finish grade where the ground line is below (but no more than two inches) the safety flange connection.

8. Fire hydrants shall be rotated such that the four and one half (4 ½) inch hose connection faces the normal fire apparatus route.

PART 5 – BACKFLOW PREVENTION DESIGN AND REQUIREMENTS

5.01 General

Appropriate Backflow Prevention shall be installed with all meters, fire mains, and other connections.

5.02 Direct Cross Connection

Direct cross connections shall not be allowed. The Design Engineer shall identify and coordinate the abandonment of other water sources when service is provided through an extension to the City's water system.

5.03 Siphonage

The Design Engineer shall make all attempts to design the layout of the extension in such a way as to minimize the possibility of accidental siphonage into the water system.

PART 6 – SITES AND EASEMENTS SURVEYS AND DESCRIPTIONS

6.01 General
The developer shall provide plats and descriptions, meeting minimum technical standards, prepared by and signed by a Professional Land Surveyor licensed by the State of Alabama, and assist in negotiations where required, for all sites and easements related to the project.

6.02 Plans
The project plans will show all sites and easements to be obtained for the project.

6.03 Deeds and Easements
The Design Engineer, as consultant to the developer, shall provide plats and legal descriptions to the City. The design engineer will coordinate with IPS for preparation of Deeds and Easements in accordance with City policy.

6.04 Easements Within Developments
Easements within subdivisions may be provided following the completion of construction. The Design Engineer must show the proposed easements as part of the subdivision plan and make changes on final plats to show as constructed easements prior to recording if necessary.

6.05 Easements not Within Developments
Easements not within subdivisions shall be provided prior to the scheduling of a preconstruction conference IPS.

6.06 Easement Widths
Easement width shall be sufficient for the construction and maintenance of the water main. Easement widths should be a minimum of fifteen (15) feet when located adjacent to an existing right-of-way and shall be a minimum of twenty (20) feet in width when otherwise located along a property line or through a property. Water main shall generally be installed in the center of an easement when not in conflict with Section 6.07 and 6.08. Temporary construction easements shall be provided as required.

6.07 Easements for Future Water System Expansions
Easements shall be provided for the future water system expansions to City rights-of-way where water system expansions terminate in easements.

6.08 Easements with Additional Utilities
When additional utilities, such as sewer lines, are to be installed within the same easement a minimum additional five (5) feet in width is required per utility.

6.09 Adjacent to Buildings
Easements shall be provided such that water mains shall not be installed closer than fifteen (15) feet when run parallel to a building.

6.10 Fire Hydrants in Easements

Fire hydrants shall not be located closer than five (5) feet to any easement or property boundary. Fire hydrants on public rights-of-way shall not be located closer than two (2) feet to the right-of-way. On ALDOT rights-of-way, fire hydrants shall not be placed in the rights-of-way, rather the hydrant shall be placed within an easement provided to the City.

PART 7 – STANDARD MATERIAL SPECIFICATIONS

7.01 General

All materials used in extensions of the water system shall meet or exceed all AWWA standards.

7.02 Water Mains

All water mains four (4) inches in diameter and larger shall be installed with Ductile Iron Pipe. Water mains four (4) inches in diameter through eight (8) inches in diameter shall be Class 52 pipe. All water mains twelve (12) inches in diameter and larger shall be class 50 pipe.

7.03 Material Specifications

_____

Item:	**Ductile Iron Water Main**
Type/Model:	Compression Type Joint – "Fastite"
	Restrained Joint Pipe – "Flex-Ring"
	Ball Joint Pipe – "Flex-Lok"
	ANSI/AWWA C150/A21.50 (thickness class pipe)
	ANSI/AWWA C151/A21.51 (pressure class pipe)
	ANSI/AWWA C104/A21.4 (cement lining)
	ANSI/AWWA C111/A21.11 (gaskets)
Manufacturers:	American Cast Iron Pipe Co.
	U.S. Pipe
Other:	Bituminous Seal Coat Required

_____

Item:	**Copper Pipe**
Type/Model:	ASTM B-88-62 "Type K Soft"
Manufacturers:	
Other:	Shall be seamless

_____

Item:	**Brass Pipe**
Type/Model:	ASTM B-43 Red Brass (Copper Alloy C230)
Manufacturers:	McDonald
	Merit
	General Pipe Works
Other:	Shall be seamless

_____

Item:	**PVC Pipe**
Type/Model:	SDR 21 – Cl. 200 ASTM D1784-69 (PVC Resins) ASTM D72.7-67 (for PVC Pipe)
Manufacturers:	
Other:	20 foot lengths Gaskets shall be permanently attached

_____

Item:	**Steel Casing Pipe**
Type/Model:	ASTM A135, Grade B
Manufacturers:	
Other:	Minimum yield point of 35,000 psi Shall be coal tar epoxy coated (AWWA C203) Shall be seamless Shall be installed with spacers and endseals

_____

Item:	**Fittings, Ductile Iron, Mechanical Joint**	
Type/Model:	ANSI/AWWA C153/A21.53-84 ANSI/AWWA C110/A21.10	
Manufacturers:	American Cast Iron Pipe Co. U.S. Pipe Mueller Clow	Harco Trinity Valley Union Foundry Tyler Foundry
Other:	Bituminous Seal Coat Required Min. Cl. 250 Rated Pressure Compact or Full-Bodied (No Long Radius) Caps and Plugs shall be center-tapped with a 2” IP Thread Tap	

_____

Item:	**Fittings, Ductile Iron, Flanged**
Type/Model:	ANSI/AWWA C153/A21.53-84 (compact fittings) ANSI/AWWA C110/A21.10
Manufacturers:	American Cast Iron Pipe Co. — Harco U.S. Pipe — Trinity Valley Mueller — Union Foundry Clow — Tyler Foundry
Other:	Bituminous Seal Coat Required Min. Cl. 250 Rated Pressure Flanges shall be 125 psi rated Compact or Full-Bodied (No Long Radius) Caps and Plugs shall be center-tapped with a 2” IP Thread Tap

_____

Item:	**Tapping Sleeves, Ductile Iron**
Type/Model:	Mechanical Joint Type AWWA C102-53, C105-53, C108-53
Manufacturers:	Mueller, M&H, Clow, US Pipe
Other:	Rated for 200 psig

_____

Item:	**Restaint Glands, Mechanical Joint**
Type/Model:	Ductile Iron ASTM A 536-80 ANSI/AWWA C111/A21.11 (gaskets) ANSI/AWWA C153/A21.53-84 (compact fittings) ANSI/AWWA C110/A21.10
Manufacturers:	EBAA Iron, Inc. MEGALUG STAR Pipe Products
Other:	Devices shall be heat treated to min. hardness of 370 BHN Shall be made to fit standard bell and tee-headed bolts Shall use twist-off nut heads to ensure correct bolt torque Working pressure rating of 250 psi with 2:1 FOS

_____

Item:	**Foster Adapter**
Type/Model:	ANSI/AWWA C153/A21-53 (ductile iron)
Manufacturers:	Infact Corporation
Other:	Minimum rated working pressure of 350 psi

_____

Item:	**Pipe (Anchor) Couplings**
Type/Model:	AISI C1012 or ASMSA36 ASTM A513, ASTM A635 or ASME SA675 GR60 (Middle Ring)
Manufacturers:	Union, Tyler
Other:	Bolts shall meet ANSI/AWWA C111/A21-11 Laying length = 12”

_____

Item:	**Gate Valves, Mechanical Joint or Flanged End, Resilient Seat**
Type/Model:	AWWA C509
Manufacturers:	American Cast Iron Pipe Co. Clow U. S. Pipe M&H Valve Company Mueller
Other:	Non-Rising Stem Req’d, capable of removal without disassembly of the valve and interchangeable with like size valve stems Left (Counter-clockwise) opening, 2” square operating nut “O” ring seals Asphalt varnish coated or approved alternate

_____

Item:	**Tapping Valves**
Type/Model:	AWWA C509
Manufacturers:	American Cast Iron Pipe Co. Clow U. S. Pipe M&H Valve Company Mueller
Other:	Non-Rising Stem Req’d Left (Counter-clockwise) opening, 2” square operating nut “O” ring seals Asphalt varnish coated or approved alternate Connection end shall be mechanical joint Seat opening shall be larger than nominal size to allow for full diameter cuts

_____

Item:	**Valve Boxes**
Type/Model:	Cast Iron Adjustable Screw Top
Manufacturers:	Opelika Foundry (#4905) Tyler Foundry (#6850) Bingham & Taylor (#4905)
Other:	Shall be adjustable from 18”-24” and 24”-36” Cap shall have the word “WATER” cast in Cap shall have 2 slots for hooks to open top Inside diameter shall be 5 ¼” Bottom shall have a flared end to prevent settling

_____

Item:	**Backflow Preventers**
Type/Model:	Wilkins 950 or Watts 709
Manufacturers:	Watts, Wilkins
Other:	1 ½ ” and larger shall include resilient seat gate valves Shall have replaceable seats Shall be serviceable in-line Shall utilize split design body bolted together between check Lead-free

_____

Item:	**Regulating Valves, High Pressure**
Type/Model:	Wilkins Model 600XL-HR
Manufacturers:	Wilkins
Other:	Sized ¾” – 1” Spring Range shall be 75-125 psi Shall be preset to 80 psi Bronze body and bell housing Built-in bypass to prevent excessive pressure caused by thermal expansion Shall be serviceable in-line Shall be Female Iron Pipe Thread (FIP) by Female Iron Pipe Thread (FIP) Lead-free

_____

Item:	**Male Iron Pipe X Compression Adapters**
Type/Model:	AWWA C800
Manufacturers:	
Other:	¾” or 1” opening Req’d Shall have compression nut with gripper ring and gasket providing a water tight seal by compressing of gasket around tubing and compressing the gripper ring providing high pull out resistance (no split type clamps requiring a set screw or bolt will be accepted), Lead-free

_____

Item:	**Curb Stops**
Type/Model:	Ball Valve Compression Type
Manufacturers:	McDonald, Ford, Mueller (McDonald 76102BWQ or equivalent)
Other:	Shall have compression nut with gripper ring and gasket providing a water tight seal by compressing of gasket around tubing and compressing the gripper ring providing high pull out resistance (no split type clamps requiring a set screw or bolt will be accepted) 300 psi rating, Locking Wing, Lead-free

_____

Item:	**Meter Couplings**
Type/Model:	ASTM B-62
Manufacturers:	Ford, McDonald, Mueller
Other:	Shall be full opening (3/4” = 3/4” opening, 1”=1” opening), Lead-free

_____

Item:	**Meter, Water – Positive Displacement**
Type/Model:	AWWA C700 Magnetic Drive, Sealed Register, Positive Displacement Oscillating Type Cold Water, 150 psi operating pressure
Manufacturers:	US Manufacturers only
Other:	Non-corrosive water works bronze outer case with separate measuring chamber Shall have size, model, serial number and direction of flow cast into body Shall be provided with bronze bottom Shall be provided with an AWWA C707 encoded register, straight reading type, with full test dial on the register, and stainless steel register cup

Shall read in cubic feet and be capable of direct read with a meter transceiver unit for use with an automatic meter reading system
Meter register shall be bronze and connected to the meter by three terminal connections
Register output shall be 7-bit ASCII digital capable of transmission to an automatic meter reading system
One year warranty req'd, 15 year (1,500,000 gal.) meter performance req'd

_____

Item: **Meter, Water – Turbine (T^2)**
Type/Model: AWWA C707
Unitized construction, turbine type, with measuring element mounted on a horizontal stationary sleeve bearing shaft
Manufacturers: US Manufacturers only
Other: Non-corrosive water works bronze outer case with separate measuring chamber
Shall have size, model, serial number and direction of flow cast into body
Shall be provided with bronze bottom
Shall be provided with an AWWA C707 encoded register, straight reading type, with full test dial on the register, and stainless steel register cup
Shall read in cubic feet and be capable of direct read with a meter transceiver unit for use with an automatic meter reading system
Meter register shall be bronze and connected to the meter by three terminal connections
Register output shall be 7-bit ASCII digital capable of transmission to an automatic meter reading system
Flanges shall be round type, flat faced and conform to ANSI 16.1 for diameter, drilling and thickness
One year warranty req'd, 5 year experience as marketable products

_____

Item: **Meter, Water – Compound (Omni)**
Type/Model: AWWA C702
Single register compound meter totalizing from two measuring chambers (turbine for high flow, oscillating piston for low flow)
Manufacturers: US Manufacturers only
Other: Non-corrosive water works bronze outer case with separate individually replaceable measuring chambers
Shall have size, model, serial number and direction of flow cast

into body
Shall be provided with bronze bottom
Shall be provided with an AWWA C707 encoded register, straight reading type, with full test dial on the register, and stainless steel register cup
Shall read in cubic feet and be capable of direct read with a meter transceiver unit for use with an automatic meter reading system

Meter register shall be bronze and connected to the meter by three terminal connections
Register output shall be 7-bit ASCII digital capable of transmission to an automatic meter reading system
Flanges for 3" – 6" shall be round type, flat faced and conform to ANSI 16.1 for diameter, drilling and thickness
One year warranty req'd

_____

Item:	**Large Meter, PRV, and Backflow Preventer Vaults**
Type/Model:	Model WA00(size) 3' x 5' – 2 piece lids, 4' x 6' – 3 piece lids
Manufacturers:	Strongwell
Other:	Reinforced polymer concrete panel vaults manufactured in molded structural shapes Inner surface shall have a heavy gel coat of polyester resin for a smooth non-abrasive surface Shall include a one piece collar to keep structure square Non-locking lid with "WATER" logo imprinted Cover shall have an 8,000 pound service load over a 10 inch square

_____

Item:	**Fire Hydrants**
Type/Model:	AWWA C502
Manufacturers:	American Cast Iron Pipe Co. Mark 73 Mueller Centurion M&H Valve Co. Model 129 Clow Valve Company Medallion US Pipe Company Metropolitan 250 M-94
Other:	Test pressure of 300 psi and working pressure of 175 psi req'd 4 ½" valve opening req'd Bury length will be provided to ensure proper height setting Two 2 ½ hose nozzles thread spec NST One 4 ½" pumper nozzle, thread spec GA 4-556 Operating nut shall be 1 ½" pentagonal bronze left operating 6" mechanical joint or flanged shoe req'd Shall be painted red enamel Shall be break away traffic model safety flanges Shall be provided with non-kinking chains, rubber gasket sealed caps, double drain valves and double drain openings, and positive stop stem All operating parts shall be bronze Bonnet assembly shall be one-piece and provided with an oil reservoir and lubrication system that automatically lubricates each use Drain valve system shall be fully automatic and not requiring field adjustment, sealed when the hydrant is fully open and forced-flushed when hydrant is opened and closed

PART 8 - REFERENCES

American Water Works Association, “Distribution Network Analysis for Water Utilities,” Manual M32, First Edition (1989).

American Water Works Association, “Distribution System Requirements for Fire Protection,” Manual M31, Third Edition (1998).

American Water Works Association, “External Corrosion-Introduction to Chemistry and Control,” Manual M27, First Edition (1997).

American Water Works Association, “Sizing Water Service Lines and Meters,” Manual M22, Second Edition (2004).

American Water Works Association, “Installation of Ductile Iron Mains and Their Appurtenances,” Standard C600-10, November 2010.

AWWA Research Foundation, “Residential End Uses of Water,” (1999).

Alabama Department of Environmental Management, “ADEM Design Guidance,” December 1998.

Alabama Department of Environmental Management, “Water Supply Division Regulations, Division 7,” March 12, 2002.

Alabama Water Works Manual (1997).

Babbit, Harold E., James L. Doland and John L. Cleasby, “Water Supply Engineering,” Sixth Edition, McGraw-Hill, 1967.

Ductile Iron Pipe Research Association, “Thrust Restraint Design for Ductile Iron Pipe,” Seventh Edition, May 2016.

Heald, C. C., “Cameron Hydraulic Data,” Eighteenth Edition, Third Printing, 1998.

Insurance Services Office, “Guide for Determination of Needed Fire Flow,” 2004.

Mays, Larry W., “Water Distribution Systems Handbook,” McGraw-Hill, 2000.

Southeastern Association of Fire Chiefs, “Standard Fire Prevention Code 1997 Edition,” 1997.

Viessman, Warren, Jr., and Mark J. Hammer, “Water Supply and Pollution Control,” Fourth Edition, Harper & Row, 1985.

PART 9 – STANDARD DRAWINGS

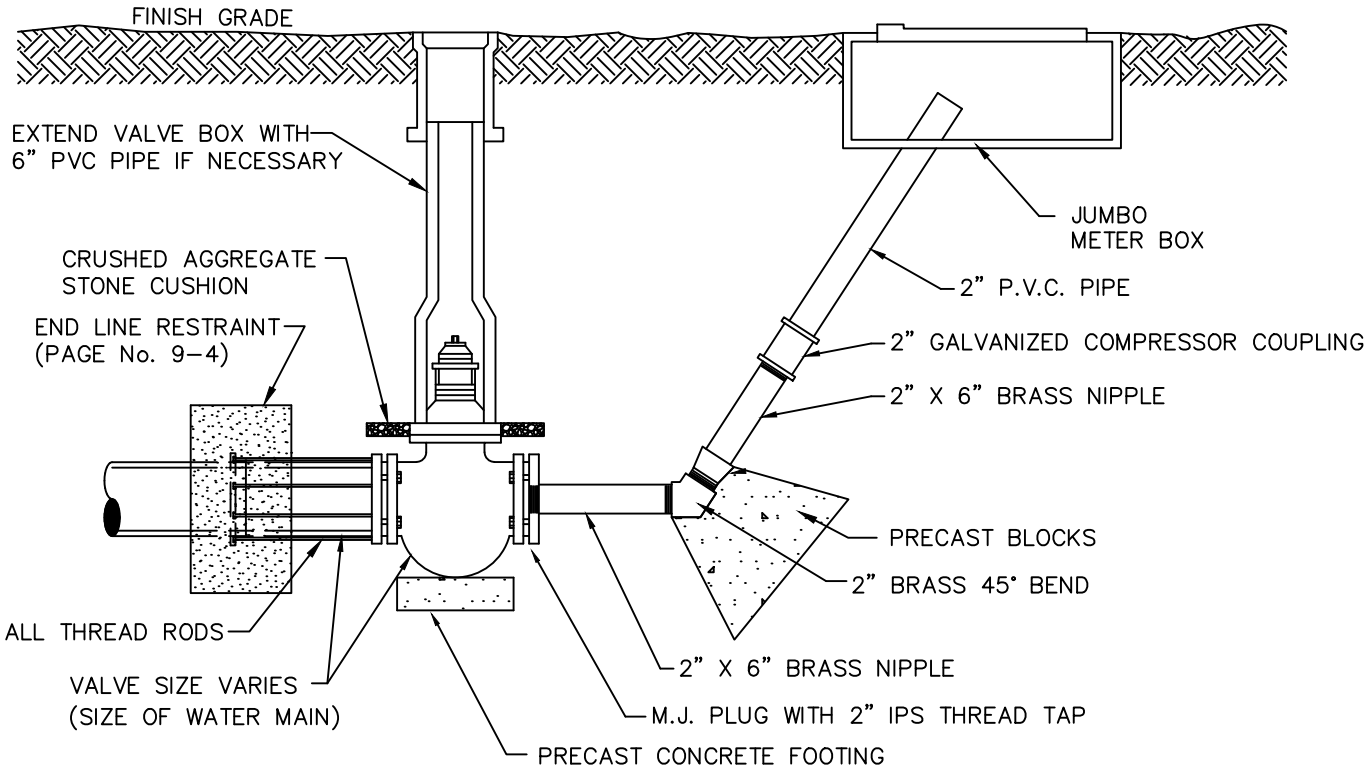

City of TUSCALOOSA

2" Flush Assembly

WATER DISTRIBUTION STANDARD DETAILS

REVISION

DATE	DESCRIPTION	BY

FILE NAME: 2IN-FLUSH-ASSEMBLY	APPROVED BY: CITY OF TUSCALOOSA INFRASTRUCTURE AND PUBLIC SERVICES	PAGE NO. 9-1
DRAWN BY: BMG		
DATE: 10/13/17		
SCALE: NOT TO SCALE		

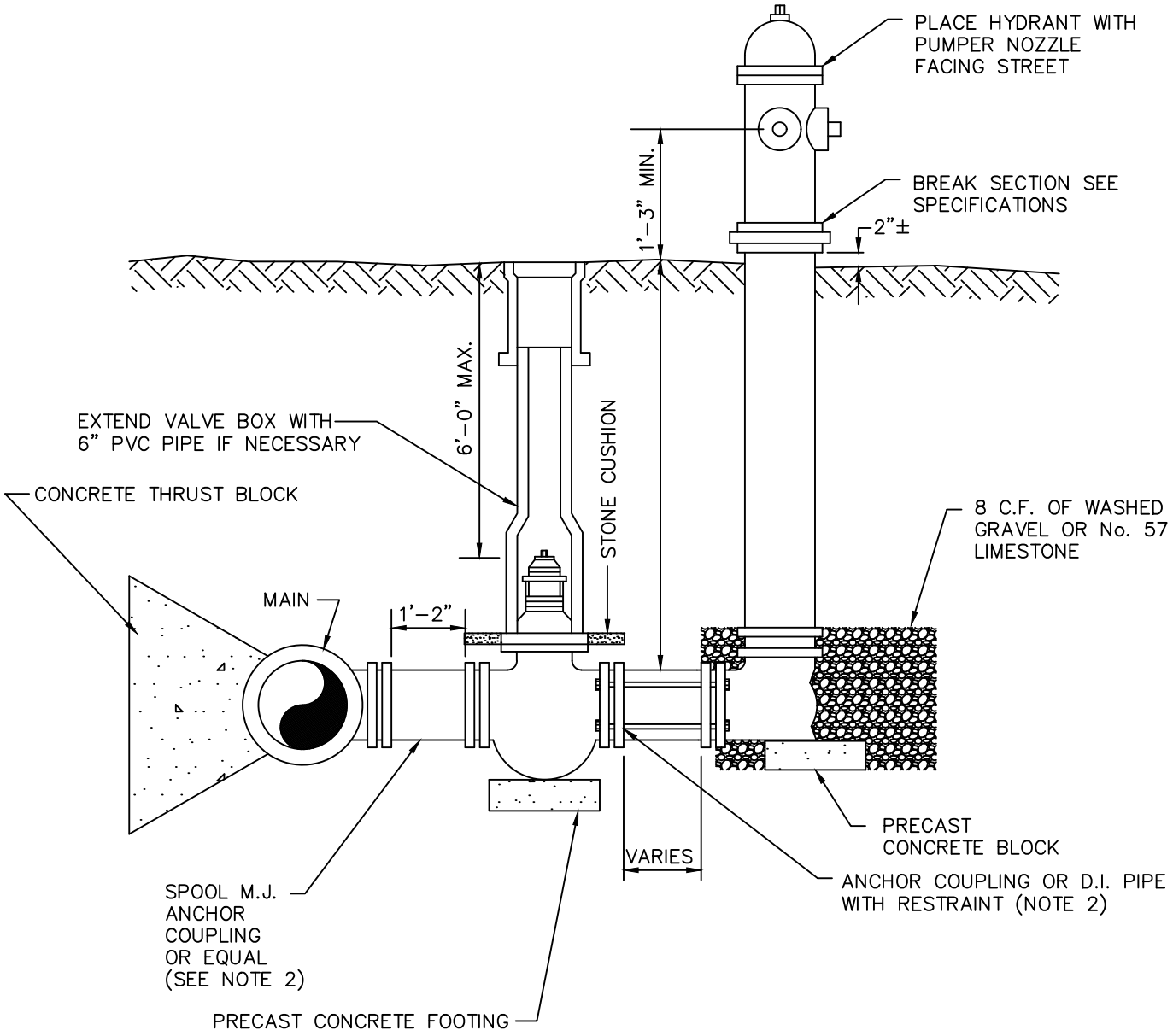

NOTE:
1. PLACE CONCRETE TO AVOID INTERFERENCE WITH BOLTS, GLANDS, ETC.
2. ALL VALVES AND HYDRANTS SHALL BE RESTRAINED WITH ANCHOR COUPLINGS OR 3/4" ALL THREAD RODS.

City of TUSCALOOSA

Fire Hydrant Assembly

WATER DISTRIBUTION STANDARD DETAILS

REVISION

DATE	DESCRIPTION	BY

FILE NAME: FIRE-HYDRANT DRAWN BY: BMG DATE: 10/13/17 SCALE: NOT TO SCALE	APPROVED BY: CITY OF TUSCALOOSA INFRASTRUCTURE AND PUBLIC SERVICES	PAGE NO. 9-2

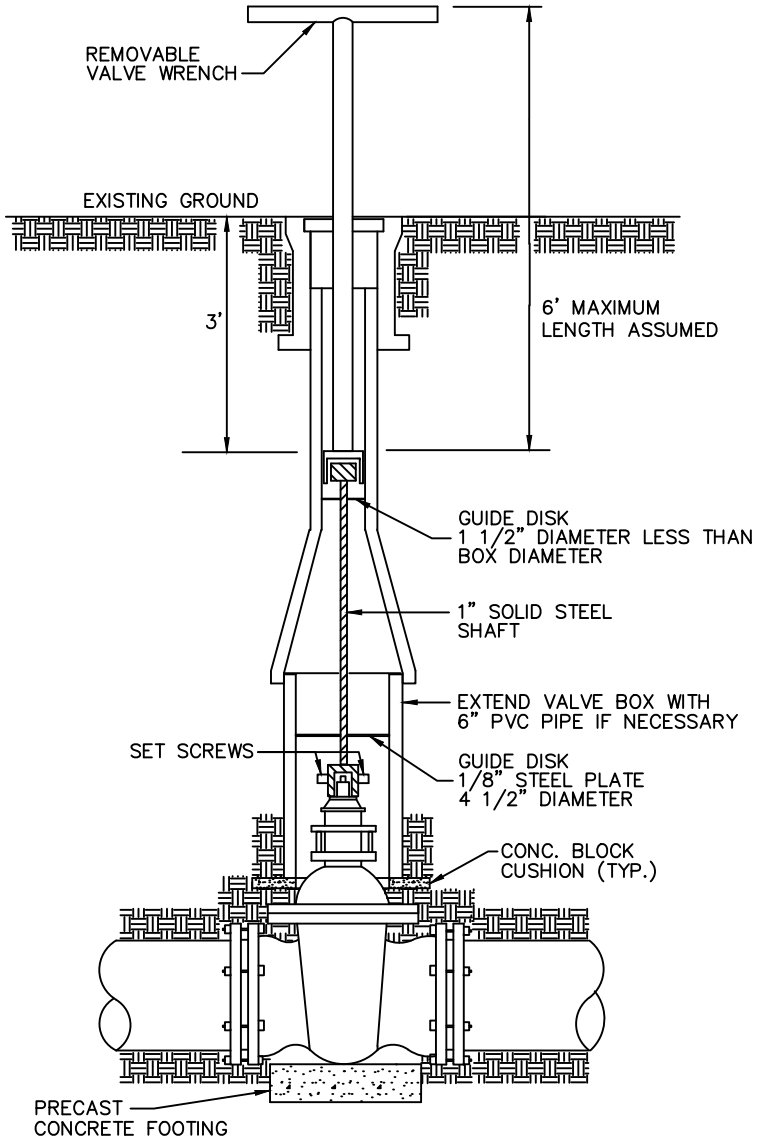

City of TUSCALOOSA

Valve Box and Operating Nut Extension

WATER DISTRIBUTION STANDARD DETAILS

REVISION

DATE	DESCRIPTION	BY

FILE NAME: VALVE BOX & OP-NUT EXT	APPROVED BY: CITY OF TUSCALOOSA INFRASTRUCTURE AND PUBLIC SERVICES	PAGE NO. 9-3
DRAWN BY: BMG		
DATE: 10/13/17		
SCALE: NOT TO SCALE		

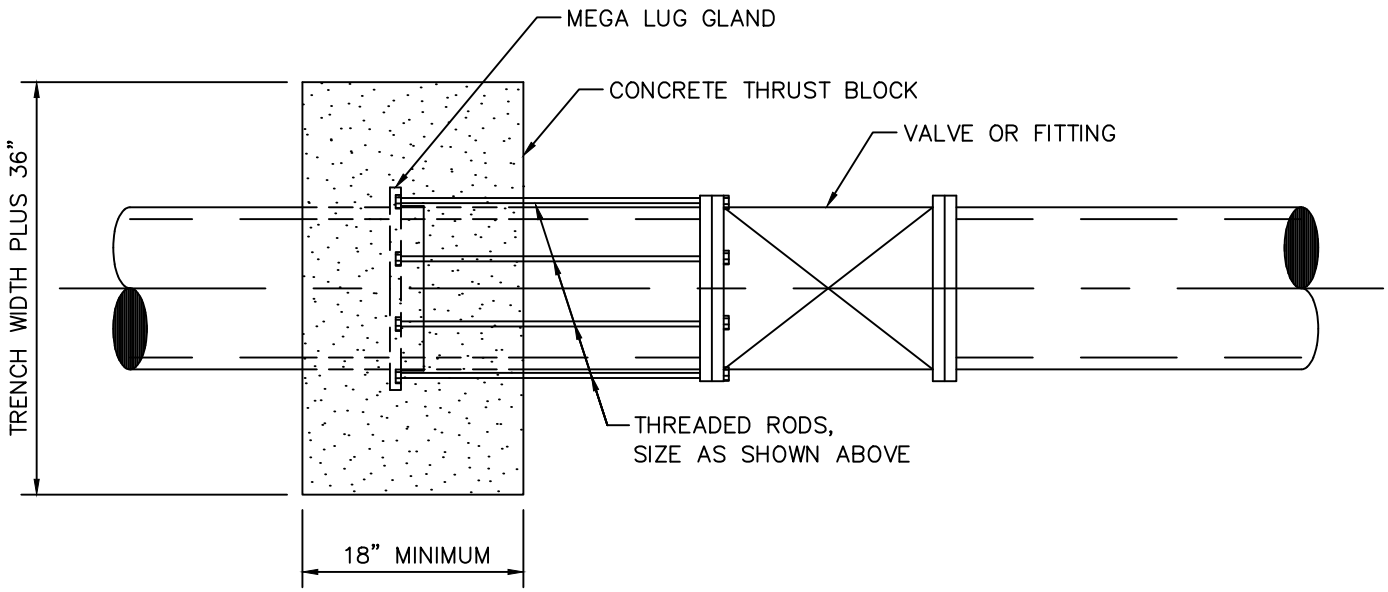

NUMBER OF TIE RODS REQUIRED
FOR TEES, PLUGS, OR CAPS.
TIE RODS SHALL BE ZINC PLATED STEEL,
THREADED.

PIPE SIZE	ROD SIZE	No. OF RODS
6"	¾"	2
8"	¾"	2
10"	¾"	2
12"	¾"	4
14"	¾"	4
16"	¾"	6
18"	¾"	6
20"	¾"	8
24"	¾"	12
30"	1"	10
36"	1"	12

*ENGINEER SHALL SPECIFY ADDITIONAL RODS AS REQUIRED

City of TUSCALOOSA

End Line Restraint

WATER DISTRIBUTION STANDARD DETAILS

REVISION

DATE	DESCRIPTION	BY

FILE NAME: END-LINE-RESTRAINT
DRAWN BY: BMG
DATE: 10/13/17
SCALE: NOT TO SCALE

APPROVED BY:
CITY OF TUSCALOOSA
INFRASTRUCTURE
AND PUBLIC SERVICES

PAGE NO.
9-4

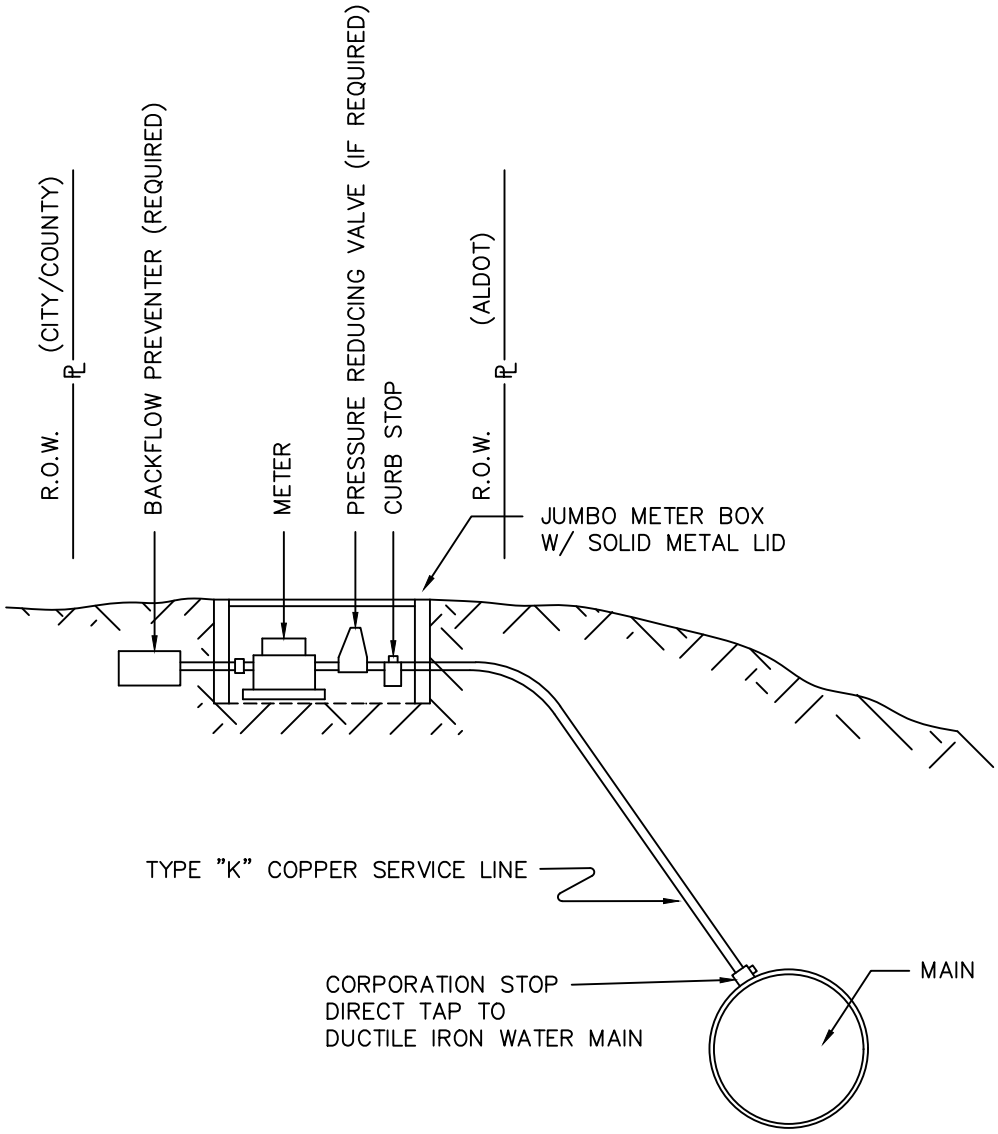

METER BOX SIZE

3/4" METER SETTING (REQUIRES JUMBO METER BOX)
1" METER SETTING (REQUIRES JUMBO METER BOX)
1 1/2" METER SETTING (REQUIRES 2–JUMBO METER BOXES)
2" METER SETTING (REQUIRES 2–JUMBO METER BOXES)
NOTE: METERS TO BE INSTALLED ONLY IN GRASSED / UNPAVED AREAS

City of TUSCALOOSA

Service Installation

WATER DISTRIBUTION STANDARD DETAILS

REVISION

DATE	DESCRIPTION	BY

FILE NAME: SERVICE–INSTALLATION	APPROVED BY: CITY OF TUSCALOOSA INFRASTRUCTURE AND PUBLIC SERVICES	PAGE NO. 9-5
DRAWN BY: BMG		
DATE: 10/13/17		
SCALE: NOT TO SCALE		

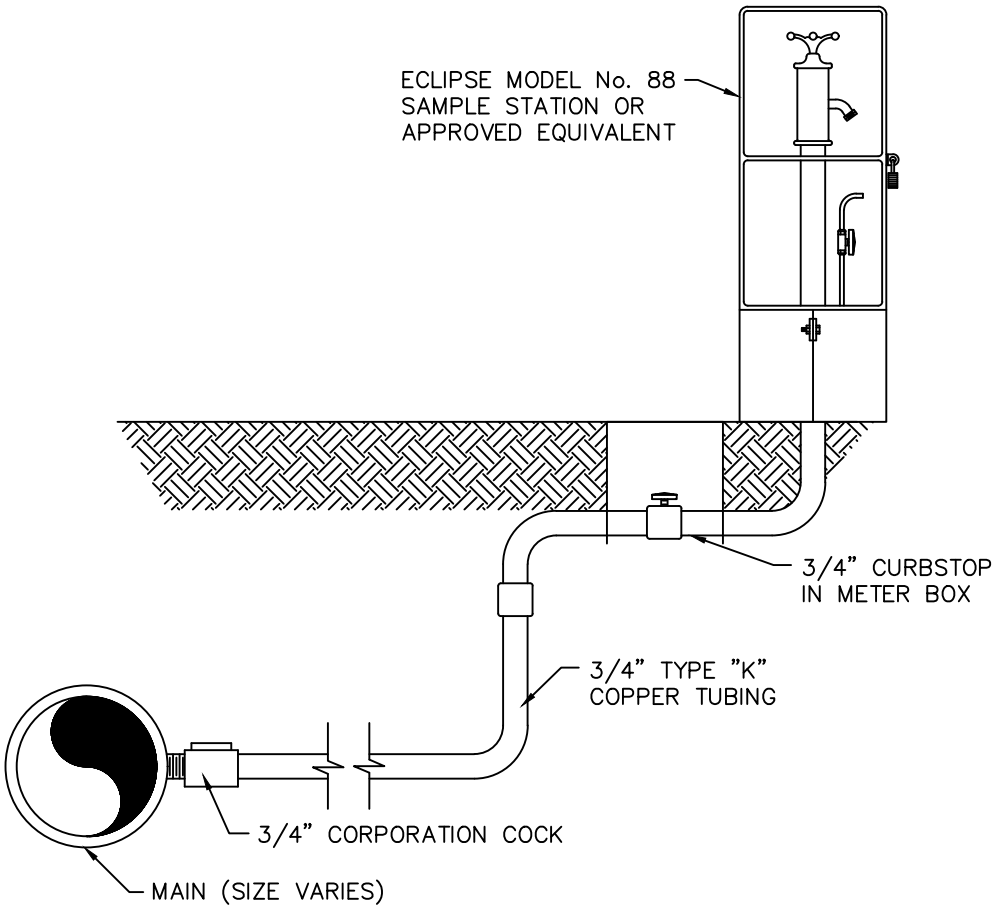

City of TUSCALOOSA

Bacteriological Sampling Station

WATER DISTRIBUTION STANDARD DETAILS

REVISION

DATE	DESCRIPTION	BY

FILE NAME: BACT-STATION	APPROVED BY: CITY OF TUSCALOOSA INFRASTRUCTURE AND PUBLIC SERVICES	PAGE NO. 9-6
DRAWN BY: BMG		
DATE: 10/13/17		
SCALE: NOT TO SCALE		

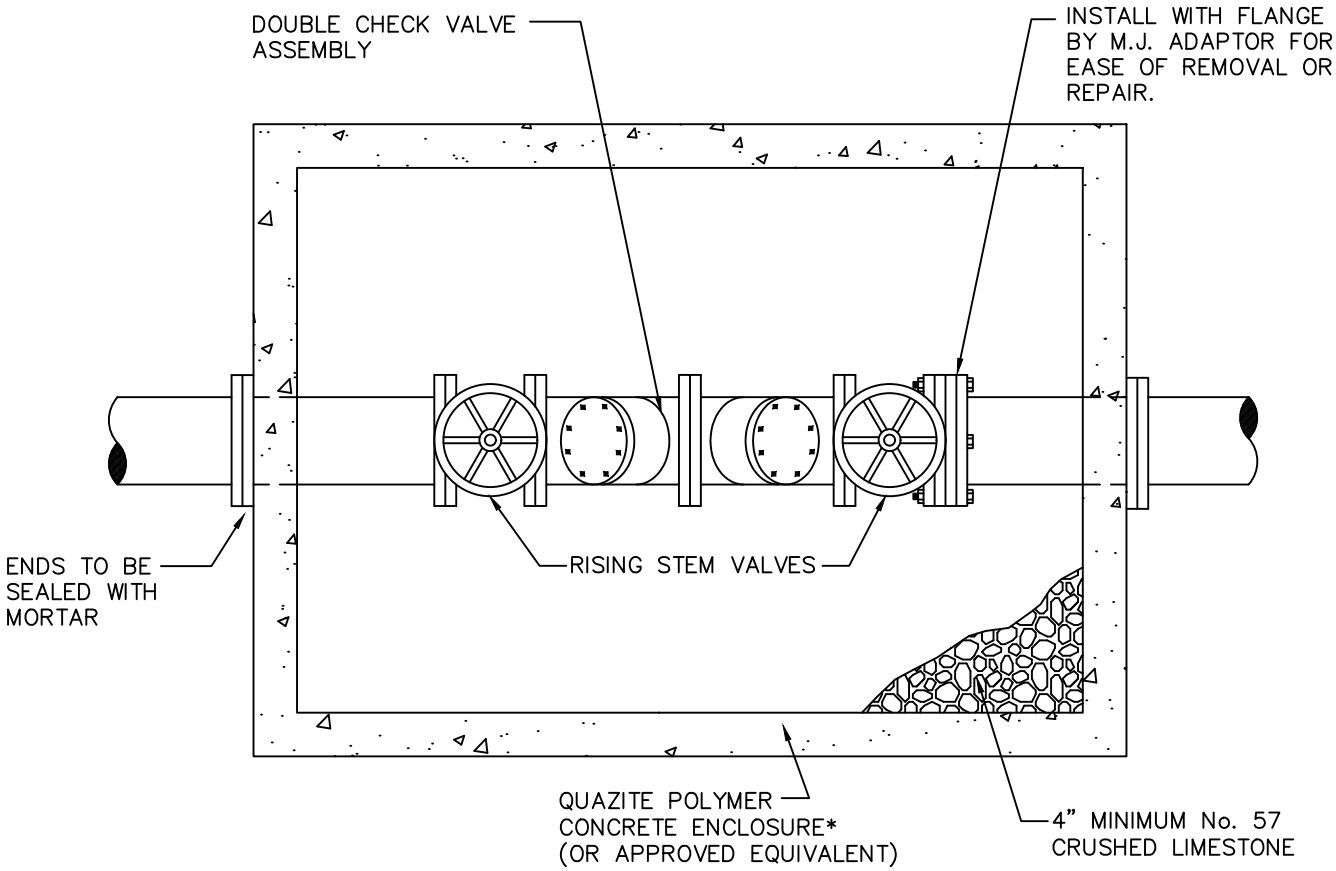

NOTE: DOUBLE CHECK VALVE ASSEMBLY, PIPING AND VAULT SIZE WILL VARY DEPENDING ON MAIN SIZE. DETAIL SHOWN IS PROVIDED AS A "TYPICAL" INSTALLATION. CITY WILL ALLOW DEVELOPER INSTALLED FIRE PROTECTION TAMPER SWITCHES. THE CITY WILL NOT MAINTAIN THE SWITCHES.

METER SIZE	VAULT SIZE
3"	3' X 5'
4"	3' X 5'
6"	4' X 6'
8"	4' X 6'

*SHOULD LOCATION OF ASSEMBLY REQUIRE AN ENCLOSURE RATED FOR HIGHER LOADS, IT SHALL BE PROVIDED

City of TUSCALOOSA

Double Check Valve Assembly

WATER DISTRIBUTION STANDARD DETAILS

REVISION

DATE	DESCRIPTION	BY

FILE NAME: DBL-VALVE-ASSY
DRAWN BY: BMG
DATE: 10/13/17
SCALE: NOT TO SCALE

APPROVED BY: CITY OF TUSCALOOSA INFRASTRUCTURE AND PUBLIC SERVICES

PAGE NO. 9-7

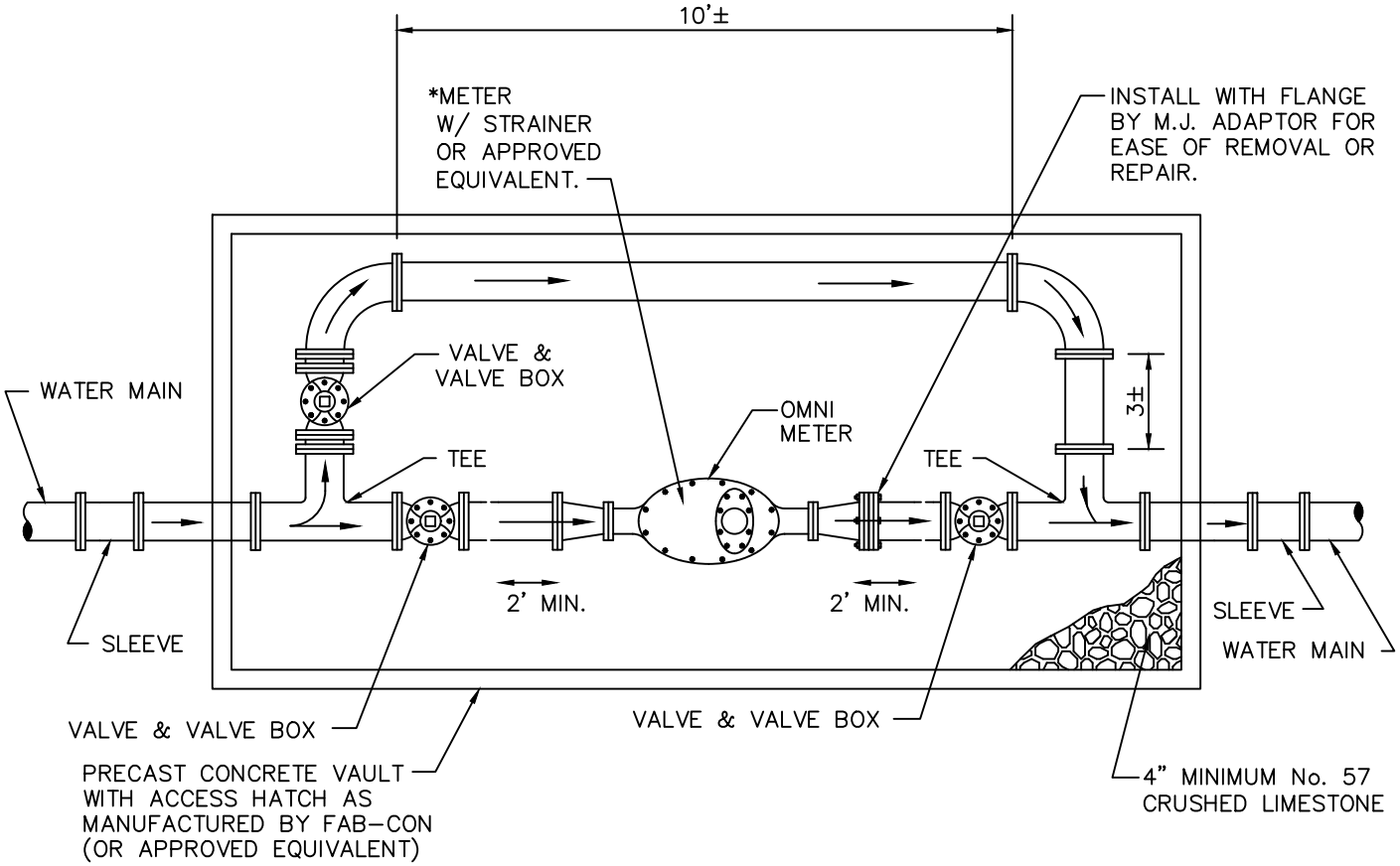

NOTE: ALL PIPING INCLUDED IN METER STATION INSTALLATION SHALL BE CL. 250 DUCTILE IRON, FLANGED. DIMENSIONS SHOWN ARE APPROXIMATE & MAY VARY WITH DIFFERENT FITTINGS & VALVE MANUFACTURERS. METER, VALVE AND PIPING SIZE WILL VARY DEPENDING ON FLOW REQUIRED, DETAIL SHOWN IS PROVIDED AS A "TYPICAL" INSTALLATION.

METER SIZE	VAULT SIZE
3"	3' X 5'**
4"	4' X 6'**
6"	6' X 8'
8"	8' X 8'

*METER TYPE / MANUFACTURER TO BE VERIFIED WITH IPS PRIOR TO INSTALLATION
**ADDITIONAL VAULT REQUIRED FOR BACKFLOW PREVENTOR

City of TUSCALOOSA

Meter Station

3" AND LARGER METER

WATER DISTRIBUTION STANDARD DETAILS

REVISION

DATE	DESCRIPTION	BY

FILE NAME: METER-STATION
DRAWN BY: BMG
DATE: 10/13/17
SCALE: NOT TO SCALE

APPROVED BY: CITY OF TUSCALOOSA INFRASTRUCTURE AND PUBLIC SERVICES

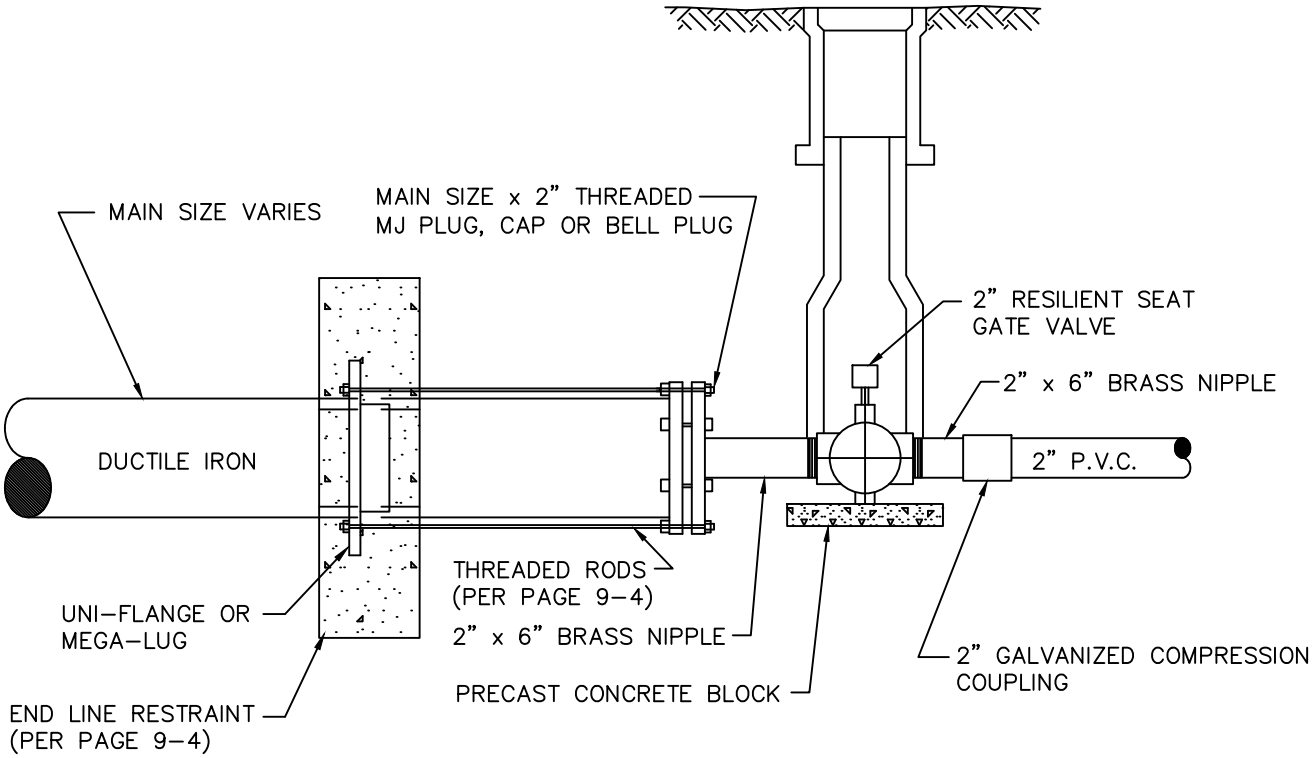

City of TUSCALOOSA

2" Watermain Reducer Assembly

WATER DISTRIBUTION STANDARD DETAILS

REVISION

DATE	DESCRIPTION	BY

FILE NAME: 2" WATERMAIN REDUCER	APPROVED BY: CITY OF TUSCALOOSA INFRASTRUCTURE AND PUBLIC SERVICES	PAGE NO. 9-9
DRAWN BY: BMG		
DATE: 10/13/17		
SCALE: NOT TO SCALE		

NOTE:

BLOCKING SHALL BE PLACED AGAINST SUITABLE UNDISTURBED EARTH OR ROCK.

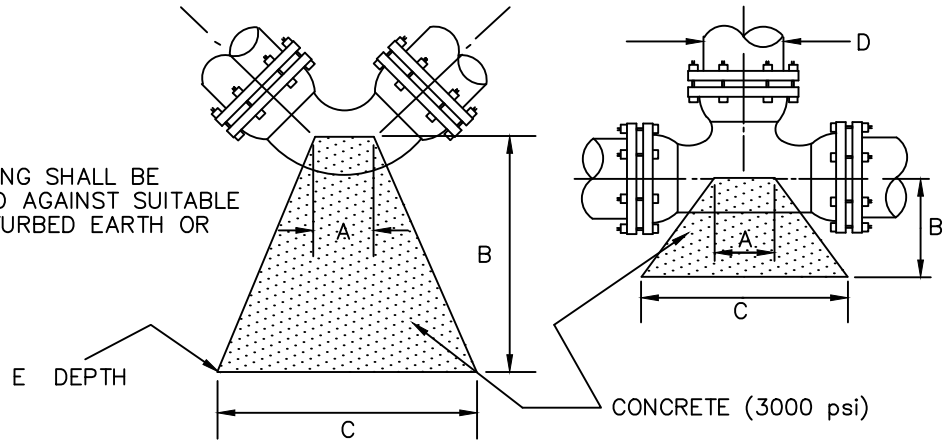

PIPE SIZE D	BLOCK DIMENSION				FITTING TYPE
	A	B	C	E	
6" OR LESS	10"	2'–0"	2'–6"	2'–6"	90°, 45°, 22½°, 11¼° BENDS
6" OR LESS	10"	2'–0"	2'–6"	2'–0"	DEAD ENDS, TEES
8"	10"	2'–0"	3'–0"	2'–6"	90°, 45°, 22½°, 11¼° BENDS
8"	10"	2'–0"	3'–0"	2'–0"	DEAD ENDS, TEES
10"	1'–2"	3'–0"	3'–6"	3'–0"	90°, 45°, 22½°, 11¼° BENDS
10"	1'–2"	3'–0"	3'–6"	2'–6"	DEAD ENDS, TEES
12"	1'–2"	3'–0"	4'–6"	3'–6"	90°, 45°, 22½°, 11¼° BENDS
12"	1'–2"	3'–0"	4'–6"	3'–0"	DEAD ENDS, TEES
14"	1'–6"	3'–6"	5'–0"	4'–0"	90°, 45°, 22½°, 11¼° BENDS
14"	1'–6"	3'–6"	5'–0"	3'–0"	DEAD ENDS, TEES
16"	1'–6"	3'–6"	5'–0"	5'–0"	90°, 45°, 22½°, 11¼° BENDS
16"	1'–6"	3'–6"	5'–0"	4'–0"	DEAD ENDS, TEES

* THRUST BLOCKS FOR LINES GREATER THAN 16" SHALL BE DESIGNED BY THE DESIGN ENGINEER FOR THE INDIVIDUAL PROJECT.

SOURCE : DIPRA THRUST RESTRAINT DESIGN FOR DUCTILE IRON PIPE

City of TUSCALOOSA

Thrust Block Detail

WATER DISTRIBUTION STANDARD DETAILS

REVISION

DATE	DESCRIPTION	BY

FILE NAME: THRUST-BLOCK
DRAWN BY: BMG
DATE: 10/13/17
SCALE: NOT TO SCALE

APPROVED BY: CITY OF TUSCALOOSA INFRASTRUCTURE AND PUBLIC SERVICES

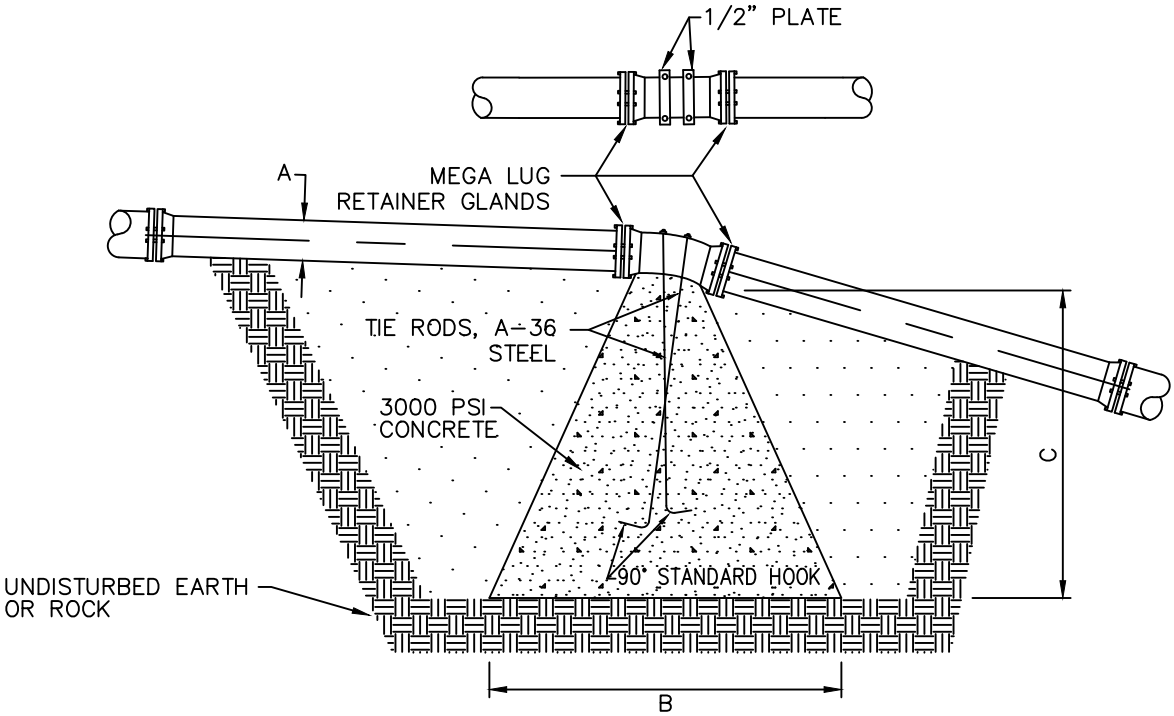

PIPE DIAMETER A	C.Y. REQ'D 45° BEND	BASE B	HEIGHT C	ANCHOR SIZE	ANCHOR EMBEDMENT
6" OR LESS	2.7	8' x 8'	4'-0"	¾"	2'-0"
8"	4.0	9' x 9'	4'-6"	¾"	2'-0"
10"	6.0	10' x 10'	5'-0"	¾"	2'-0"
12"	8.5	12' x 12'	6'-0"	¾"	2'-0"
14"	11.5	13' x 13'	6'-6"	¾"	2'-0"
16"	14.8	14' x 14'	7'-0"	¾"	2'-0"

* GRAVITY THRUST BLOCKS FOR LINES GREATER THAN 16" SHALL BE DESIGNED BY THE DESIGN ENGINEER FOR THE INDIVIDUAL PROJECT.

SOURCE : DIPRA THRUST RESTRAINT DESIGN FOR DUCTILE IRON PIPE

City of TUSCALOOSA

Gravity Thrust Block Detail

WATER DISTRIBUTION STANDARD DETAILS

REVISION

DATE	DESCRIPTION	BY

FILE NAME: G-THRUST-BLOCK
DRAWN BY: BMG
DATE: 10/13/17
SCALE: NOT TO SCALE

APPROVED BY: CITY OF TUSCALOOSA INFRASTRUCTURE AND PUBLIC SERVICES

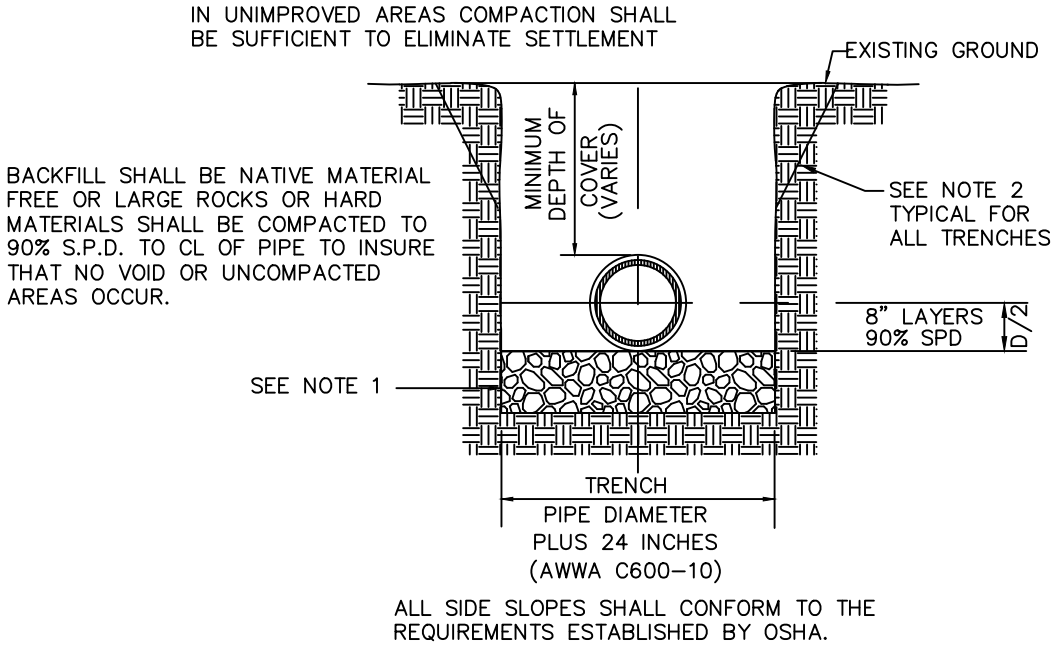

ALL SIDE SLOPES SHALL CONFORM TO THE REQUIREMENTS ESTABLISHED BY OSHA.

NOTES:

1.) TRENCH FOUNDATION REQUIRED IF DIRECTED BY THE OWNER. DEPTH VARIES.

2.) ALL SLOPES SHALL CONFORM TO OSHA REQUIREMENTS. ADDITIONAL PROTECTIVE MEASURES MAY BE REQUIRED ABOVE AND BEYOND OSHA DEPENDING ON SPECIFIC TRENCH CONDITIONS. CONTRACTOR IS SOLELY RESPONSIBLE FOR THE SAFETY OF WORKERS, THE GENERAL PUBLIC, AND OTHERS INVOLVED IN THE PROJECT AND SHALL PROVIDE SHEETING, BRACING, OR WHATEVER ACTION NECESSARY TO INSURE THE SAFETY OF PEOPLE, PROPERTY, AND STRUCTURES.

3.) BEDDING:
(A) CLASS "1" SHALL BE ALDOT 801 No. 57 CRUSHED LIMESTONE (FOR P.V.C. PIPE USE ALDOT 8910)
(B) CLASS "2" SHALL BE REINFORCED CONCRETE 3000 PSI DESIGN MIX
(C) CLASS "3" SHALL BE NATIVE SOIL

4.) MINIMUM DEPTH OF COVER VARIES (SEE SECTION 2.10 MINIMUM / MAXIMUM COVER.)

City of TUSCALOOSA

TRENCH DETAIL
Unimproved Areas

WATER DISTRIBUTION STANDARD DETAILS

REVISION		
DATE	DESCRIPTION	BY

FILE NAME: TRENCH	APPROVED BY: CITY OF TUSCALOOSA INFRASTRUCTURE CITY OF TUSCALOOSA	PAGE NO. 9-12
DRAWN BY: BMG		
DATE: 10/13/17		
SCALE: NOT TO SCALE		

IMPROVED AREAS OR LAWNS, FROM CENTER LINE OF PIPE, MATERIAL SHALL BE PLACED IN 8" LAYERS. TOP 6" SHALL BE TOPSOIL FREE FROM ROCKS, ROOTS & ETC.

BACKFILL SHALL BE NATIVE MATERIAL FREE OF LARGE ROCKS OR HARD MATERIALS SHALL BE COMPACTED TO 90% S.P.D. TO CL OF PIPE TO INSURE THAT NO VOID OR UNCOMPACTED AREAS OCCUR.

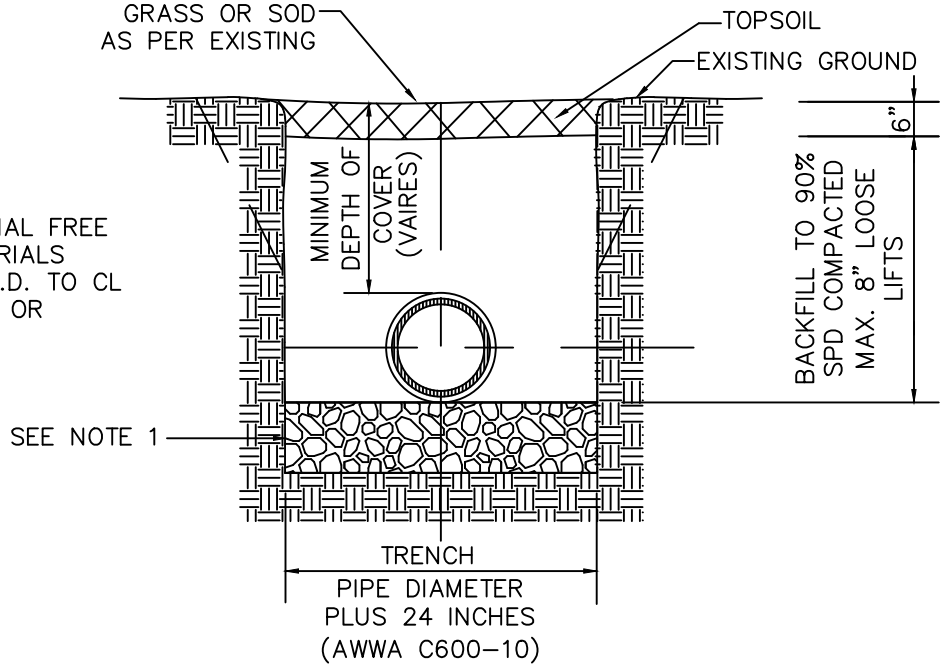

NOTES:

1.) TRENCH FOUNDATION REQUIRED IF DIRECTED BY THE OWNER. DEPTH VARIES.

2.) ALL SLOPES SHALL CONFORM TO OSHA REQUIREMENTS. ADDITIONAL PROTECTIVE MEASURES MAY BE REQUIRED ABOVE AND BEYOND OSHA DEPENDING ON SPECIFIC TRENCH CONDITIONS. CONTRACTOR IS SOLELY RESPONSIBLE FOR THE SAFETY OF WORKERS, THE GENERAL PUBLIC, AND OTHERS INVOLVED IN THE PROJECT AND SHALL PROVIDE SHEETING, BRACING, OR WHATEVER ACTION NECESSARY TO INSURE THE SAFETY OF PEOPLE, PROPERTY, AND STRUCTURES.

3.) BEDDING:
(A) CLASS "1" SHALL BE ALDOT 801 No. 57 CRUSHED LIMESTONE (FOR P.V.C. PIPE USE ALDOT 8910)
(B) CLASS "2" SHALL BE REINFORCED CONCRETE 3000 PSI DESIGN MIX
(C) CLASS "3" SHALL BE NATIVE SOIL

4.) MINIMUM DEPTH OF COVER VARIES (SEE SECTION 2.10 MINIMUM / MAXIMUM COVER.)

City of TUSCALOOSA

TRENCH DETAIL
Improved Areas or Lawns

WATER DISTRIBUTION STANDARD DETAILS

REVISION		
DATE	DESCRIPTION	BY

FILE NAME: TRENCH	APPROVED BY: CITY OF TUSCALOOSA INFRASTRUCTURE CITY OF TUSCALOOSA	PAGE NO. 9-13
DRAWN BY: BMG		
DATE: 10/13/17		
SCALE: NOT TO SCALE		

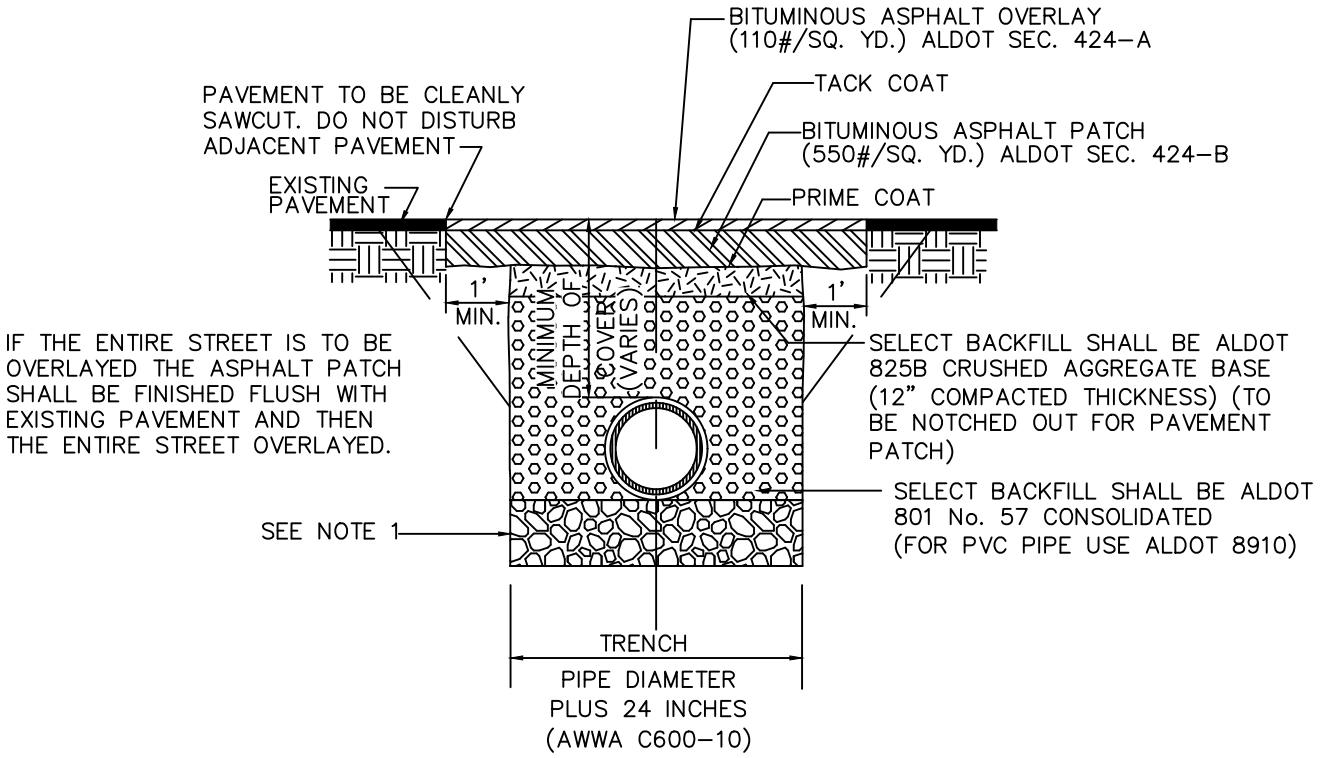

NOTES:

1.) TRENCH FOUNDATION REQUIRED IF DIRECTED BY THE OWNER. DEPTH VARIES.

2.) ALL SLOPES SHALL CONFORM TO OSHA REQUIREMENTS. ADDITIONAL PROTECTIVE MEASURES MAY BE REQUIRED ABOVE AND BEYOND OSHA DEPENDING ON SPECIFIC TRENCH CONDITIONS. CONTRACTOR IS SOLELY RESPONSIBLE FOR THE SAFETY OF WORKERS, THE GENERAL PUBLIC, AND OTHERS INVOLVED IN THE PROJECT AND SHALL PROVIDE SHEETING, BRACING, OR WHATEVER ACTION NECESSARY TO INSURE THE SAFETY OF PEOPLE, PROPERTY, AND STRUCTURES.

3.) BEDDING:
(A) CLASS "1" SHALL BE ALDOT 801 No. 57 CRUSHED LIMESTONE (FOR P.V.C. PIPE USE ALDOT 8910)
(B) CLASS "2" SHALL BE REINFORCED CONCRETE 3000 PSI DESIGN MIX
(C) CLASS "3" SHALL BE NATIVE SOIL

4.) MINIMUM DEPTH OF COVER VARIES (SEE SECTION 2.10 MINIMUM / MAXIMUM COVER.)

City of TUSCALOOSA

TRENCH DETAIL
Cut Pavement and Drive Crossings

WATER DISTRIBUTION STANDARD DETAILS

REVISION		
DATE	DESCRIPTION	BY

FILE NAME: TRENCH	APPROVED BY: CITY OF TUSCALOOSA INFRASTRUCTURE CITY OF TUSCALOOSA	PAGE NO. 9-14
DRAWN BY: BMG		
DATE: 10/13/17		
SCALE: NOT TO SCALE		

CONCRETE SHALL BE REPLACED WITH INKIND THICKNESS AND FIBER REINFORCED. CONCRETE SHALL HAVE A 28 DAY COMPRESSIVE STRENGTH OF 4000 PSI.

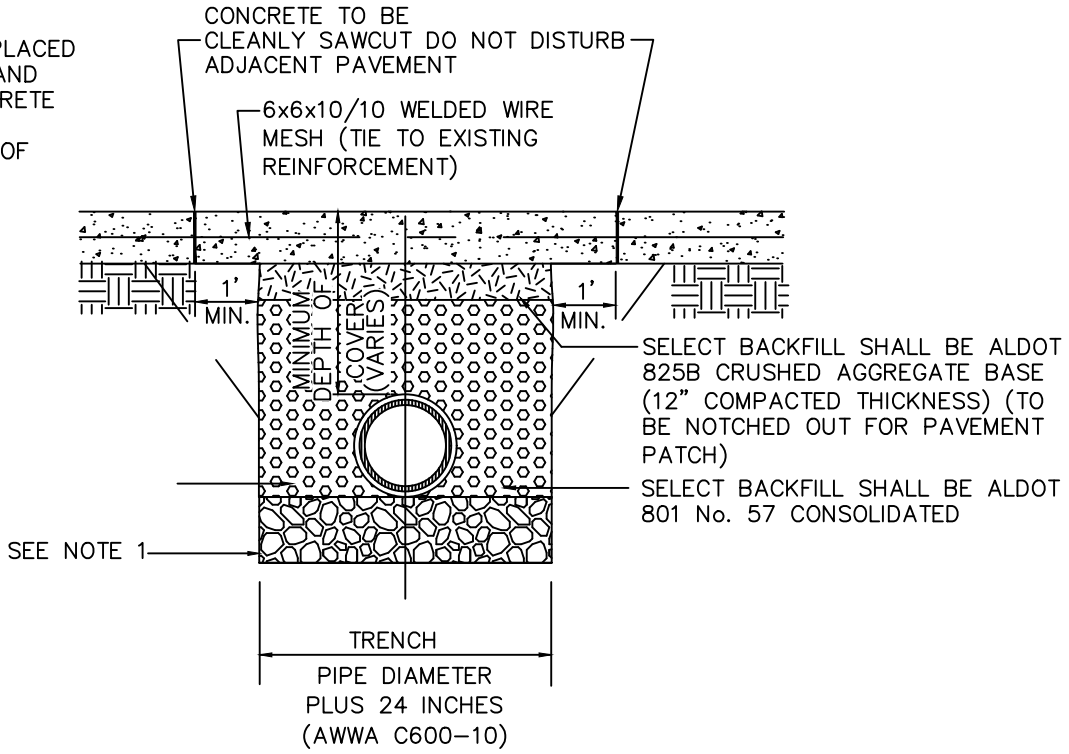

NOTES:

1.) TRENCH FOUNDATION REQUIRED IF DIRECTED BY THE OWNER. DEPTH VARIES.

2.) ALL SLOPES SHALL CONFORM TO OSHA REQUIREMENTS. ADDITIONAL PROTECTIVE MEASURES MAY BE REQUIRED ABOVE AND BEYOND OSHA DEPENDING ON SPECIFIC TRENCH CONDITIONS. CONTRACTOR IS SOLELY RESPONSIBLE FOR THE SAFETY OF WORKERS, THE GENERAL PUBLIC, AND OTHERS INVOLVED IN THE PROJECT AND SHALL PROVIDE SHEETING, BRACING, OR WHATEVER ACTION NECESSARY TO INSURE THE SAFETY OF PEOPLE, PROPERTY, AND STRUCTURES.

3.) BEDDING:
(A) CLASS "1" SHALL BE ALDOT 801 No. 57 CRUSHED LIMESTONE (FOR P.V.C. PIPE USE ALDOT 8910)
(B) CLASS "2" SHALL BE REINFORCED CONCRETE 3000 PSI DESIGN MIX
(C) CLASS "3" SHALL BE NATIVE SOIL

4.) MINIMUM DEPTH OF COVER VARIES (SEE SECTION 2.10 MINIMUM / MAXIMUM COVER.)

City of TUSCALOOSA

TRENCH DETAIL
Concrete Drive Replacement

WATER DISTRIBUTION STANDARD DETAILS

REVISION

DATE	DESCRIPTION	BY

FILE NAME: TRENCH	APPROVED BY: CITY OF TUSCALOOSA INFRASTRUCTURE CITY OF TUSCALOOSA	PAGE NO. 9-15
DRAWN BY: BMG		
DATE: 10/13/17		
SCALE: NOT TO SCALE		

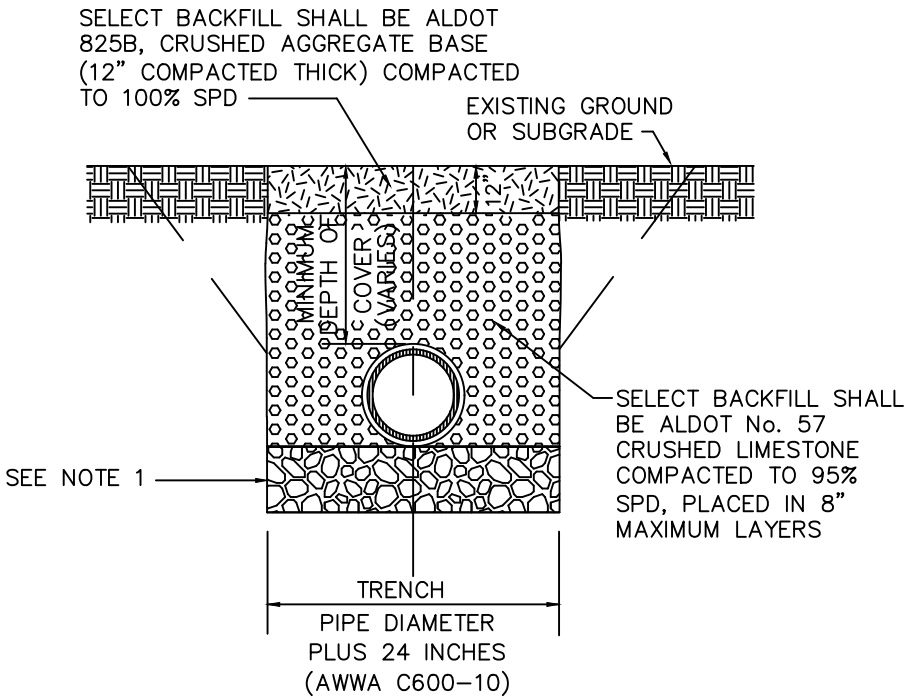

NOTES:

1.) TRENCH FOUNDATION REQUIRED IF DIRECTED BY THE OWNER. DEPTH VARIES.

2.) ALL SLOPES SHALL CONFORM TO OSHA REQUIREMENTS. ADDITIONAL PROTECTIVE MEASURES MAY BE REQUIRED ABOVE AND BEYOND OSHA DEPENDING ON SPECIFIC TRENCH CONDITIONS. CONTRACTOR IS SOLELY RESPONSIBLE FOR THE SAFETY OF WORKERS, THE GENERAL PUBLIC, AND OTHERS INVOLVED IN THE PROJECT AND SHALL PROVIDE SHEETING, BRACING, OR WHATEVER ACTION NECESSARY TO INSURE THE SAFETY OF PEOPLE, PROPERTY, AND STRUCTURES.

3.) BEDDING:
(A) CLASS "1" SHALL BE ALDOT 801 No. 57 CRUSHED LIMESTONE (FOR P.V.C. PIPE USE ALDOT 8910)
(B) CLASS "2" SHALL BE REINFORCED CONCRETE 3000 PSI DESIGN MIX
(C) CLASS "3" SHALL BE NATIVE SOIL

4.) MINIMUM DEPTH OF COVER VARIES (SEE SECTION 2.10 MINIMUM / MAXIMUM COVER.)

City of TUSCALOOSA

TRENCH DETAIL
WITHIN ROADWAY SHOULDER

WATER DISTRIBUTION STANDARD DETAILS

REVISION		
DATE	DESCRIPTION	BY

FILE NAME: TRENCH	APPROVED BY: CITY OF TUSCALOOSA INFRASTRUCTURE CITY OF TUSCALOOSA	PAGE NO. 9-16
DRAWN BY: BMG		
DATE: 10/13/17		
SCALE: NOT TO SCALE		

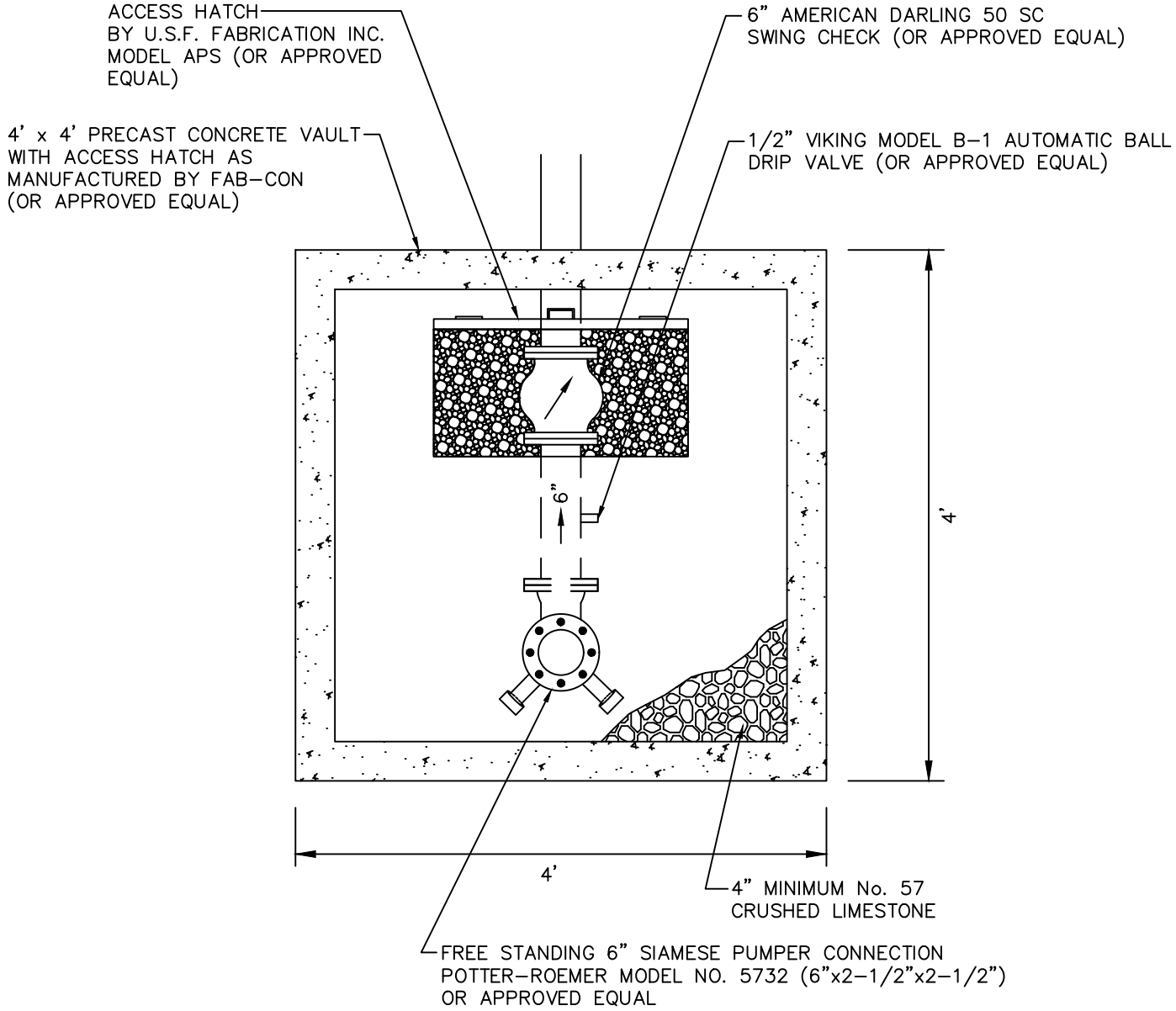

City of TUSCALOOSA

Post Siamese Connection

WATER DISTRIBUTION STANDARD DETAILS

REVISION

DATE	DESCRIPTION	BY

FILE NAME: SIAM-CONN	APPROVED BY: CITY OF TUSCALOOSA INFRASTRUCTURE AND PUBLIC SERVICES	PAGE NO. 9-17
DRAWN BY: BMG		
DATE: 10/13/17		
SCALE: NOT TO SCALE		